TFA-0102

Pacific Northwest National Laboratory
Operated by Battelle for the U.S. Department of Energy

Technical Assessment of the Draft Technology Roadmap for Treatment of INEEL Calcine Waste

C.T. Crowe
J.F. Ortaldo
J.H. Roecker
R.L. Treat
W.W. Schulz
L.L. Tavlarides
G.F. Vandegrift
E.T. Weber

March 2001

Prepared for the U.S. Department of Energy
under Contract DE-AC06-76RL071830

TFA-0102

Technical Assessment of the Draft Technology Roadmap for Treatment of INEEL Calcine Waste

C.T. Crowe
J.F. Ortaldo
J.H. Roecker
R.L. Treat
W.W. Schulz
L.L. Tavlarides
G.F. Vandegrift
E.T. Weber

March 2001

Prepared for
the U.S. Department of Energy
under Contract DE-AC06-76RL01830

Disclaimer

This report was prepared as an account of work sponsored by an agency of the United States Government. Neither the United States Government nor any agency thereof, nor Battelle Memorial Institute, nor any of their employees, makes **any warranty, express or implied, or assumes any legal liability or responsibility for the accuracy, completeness, or usefulness of any information, apparatus, product, or process disclosed, or represents that its use would not infringe privately owned rights.** Reference herein to any specific commercial product, process, or service by trade name, trademark, manufacturer, or otherwise does not necessarily constitute or imply its endorsement, recommendation, or favoring by the United States Government or any agency thereof, or Battelle Memorial Institute. The views and opinions of authors expressed herein do not necessarily state or reflect those of the United States Government or any agency thereof.

PACIFIC NORTHWEST NATIONAL LABORATORY
operated by
BATTELLE
for the
UNITED STATES DEPARTMENT OF ENERGY
under Contract DE-AC06-76RLO 1830

Printed in the United States of America

Available to DOE and DOE contractors from the
Office of Scientific and Technical Information,
P.O. Box 62, Oak Ridge, TN 37831-0062
Ph: (865) 576-8401
Fax: (865) 576-5728
Email: reports@adonis.osti.gov

Available to the public from the National Technical Information Service,
U.S. Department of Commerce, 5285 Port Royal Rd., Springfield, VA 22161
Ph: (800) 553-6847
Fax: (703) 605-6900
Email: orders@ntis.fedworld.gov
Online ordering: http://www.ntis.gov/ordering.htm

Executive Summary

Approximately 4,400 cubic meters of calcine waste are stored in stainless-steel bins at the U.S. Department of Energy's (DOE's) Idaho National Engineering and Environmental Laboratory (INEEL). Calcine waste consists of a highly radioactive mixture of metallic oxides, fluorides, and other dry solids. Per an agreement with the State of Idaho, INEEL must convert all the stored calcine waste to a "road-ready" form for disposal offsite by December 31, 2035.

In January 2001, the DOE's Idaho Operations Office (DOE-ID) requested the Tanks Focus Area (TFA) – DOE's national science and technology development and integration program for radioactive tank waste remediation – to review the *Draft Calcine Treatment Technology Development Roadmap* (Draft Roadmap) prepared by the INEEL HLW Program. The Draft Roadmap defines a proposed path forward for work required to evaluate alternatives for treatment of calcine waste using a vitrification process.

Although vitrification of calcine waste is the proposed primary treatment method for each of the three alternatives addressed in the Draft Roadmap, further technical evaluation is required to determine whether pretreatment of the calcine prior to vitrification should be performed. Pretreatment is designed to separate chemicals and radionuclides in the calcine into two streams, a radioactively concentrated high-level waste stream and a low-activity waste stream. The driver for pretreatment separations is the large monetary incentive for minimizing the volume of the high-level waste stream requiring costly treatment and disposal. The Draft Roadmap defines a path forward to resolve major technical uncertainties in the three alternatives and reach a final decision on selecting a calcine waste treatment process.

The TFA convened a panel of experts (Review Panel) consisting of eight members with expertise in the various technologies and processes included in the alternatives. The Review Panel was requested to assess the validity, feasibility, and completeness of the Draft Roadmap and to provide the results of the assessment and recommendations in a report. The Review Panel concluded that the Draft Roadmap employs a sound technical approach that, if implemented, can support defensible and successful decision-making on the disposition of INEEL calcine.

The Review Panel expressed concern, however, that the summary-level definition of the alternatives, and the work proposed to support decision-making, may be inadequate for prioritizing the work, especially because the work does not appear to be realistically matched to expected funding and staff resources, nor integrated with work presently taking place under other INEEL programs. Areas of concern included:

- Cost Estimates: For some development tasks, cost estimates appeared optimistically low, by at least a factor of two.

- Schedules: The schedules for many of the technology development activities were considered too aggressive, considering likely limitations in budget and staff

resources. Also, the work requires further prioritization such that decision-making can be supported at the earliest possible date, despite the funding and personnel constraints.

- Nuclear Safety: Increased attention should be given to potential limits that may be defined in future Safety Analysis Reports and Authorization Bases, and to the impacts of such limits on the development of the technologies.

- Flowsheets: The preliminary flowsheets developed as a basis for the Draft Roadmap should be significantly enhanced to support decision-making. Each constituent of concern in each unit of operation should be identified, and the range of uncertainty and variability in the concentrations of each constituent estimated.

The Review Panel confirmed that the cost incentives for performing pretreatment separations to decrease the volume of high-level waste are very attractive (~$2 billion lower life-cycle cost) if current cost assumptions can be validated. The Review Panel recommended a series of analyses to improve the basis of cost. These included enhanced definition of the costs for disposal of INEEL high-level waste in the National Geologic Repository, and a series of focused laboratory tests and other studies designed to further define the alternatives and evaluate their potential strengths and weaknesses. The Review Panel recommended that these laboratory tests and studies include:

- further sampling and characterization of the calcine based on a comprehensive Data Quality Objectives methodology;

- enhanced definition of the range of concentrations of all constituents of concern in conceptual batches of calcine feed for each of the three alternatives;

- accelerated testing of the Universal Solvent Extraction, or UNEX, Separations Alternative to enable an early assessment of the viability of this technically immature, but potentially lowest-cost alternative;

- assessment of requirements for disposal of optional secondary wastes from the separations alternatives as a basis for exploring options for simplifying the alternatives;

- evaluation of the heat limits and other allowable characteristics of vitrified high-level waste as a basis for confirming the validity of the high waste loadings assumed for the separations alternatives; and

- vitrifying waste streams representative of those that would be generated by separations processes to enable assessment of the potential for operational and safety problems.

Acronyms

AMP-PAN – ammonium molybdophosphate-polyacrylonitrile

BBWI – Bechtel BWXT Idaho, LCC

Cs-137 – cesium-137

CSIX – cesium ion exchange

CSSF – Calcined Solids Storage Facility

CVS – Compositional Variability Studies

DOE – U.S. Department of Energy

DOE-ID – U.S. Department of Energy Idaho Operations Office

DQO – Data Quality Objectives

DWPF – Defense Waste Processing Facility

EIS – environmental impact statement

HEDPA – hydrogen ethylene diamine pentaacetic acid

HEPA – high-efficiency particulate air

HLW – high-level waste

INEEL – Idaho National Engineering and Environmental Laboratory

INTEC – Idaho Nuclear Technology and Engineering Center

LAW – low-activity waste

LCC – life-cycle cost

LLW – low-level waste

O&M – operations and maintenance

OCRWM – DOE Office of Civilian Radioactive Waste Management

ROD – Record of Decision

SBW – sodium-bearing waste

Sr-90 – strontium-90

SREX – strontium solvent extraction

SRS – Savannah River Site

TFA – Tanks Focus Area

TRU – transuranic elements

TRUEX – transuranic solvent extraction

TSLCC – Total System Life-Cycle Cost

UDS – undissolved solids

UNEX – Universal Solvent Extraction

WAPS – Waste Acceptance Product Specifications

WVDP – West Valley Demonstration Project

Contents

Executive Summary iii

Acronyms and Abbreviations v

1.0 Introduction 1

1.1 Background 1
1.2 Alternatives Considered in the Draft Roadmap 2
1.3 Review Panel Charter and Process 4
1.4 Acknowledgements 5

2.0 Conclusions and Recommendations 6

2.1 High-Level Conclusions and Recommendations 6
2.1.1 Draft Roadmap Decision 1: Decide whether to pursue radionuclide separations alternatives to reduce HLW volume 7
2.1.2 Draft Roadmap Decision 2: Select a Preferred Separations Alternatives 9
2.2 Technology-Related Conclusions and Recommendations 10
2.2.1 Characterization 10
2.2.2 Calcine Retrieval and Handling 11
2.2.3 Pretreatment 11
2.2.4 Vitrification 12
2.2.5 Secondary Waste Treatment and Disposal 13

3.0 Draft Roadmap Approach and Bases for Review 14

4.0 Economic Considerations 19

4.1 Need for Definitive Repository Costs 19
4.2 Need for Refined Capital and Operations and Maintenance Costs 19
4.3 Potential for Lower LCC of Separations Alternatives 20
4.4 Risk of Alternative Failure 22
4.5 Cost Conclusions and Recommendations 22

5.0 Assessment of Technologies 24

5.1 Areas of Emphasis 24
5.1.1 Detailed Flowsheet Development 24
5.1.2 Nuclear Safety Analysis 25
5.1.3 Compliance with Waste Acceptance Criteria 25
5.1.4 Enhanced Characterization 25
5.1.5 Process Feasibility, Safety, and LCC Evaluations 26
5.1.6 Testing Based on Potential Fatal Flaws and Large Cost Impacts 26

5.2 Characterization 26
5.2.1 Technology Maturity 27
5.2.2 Completeness of Roadmap 27
5.2.3 Adequacy of Roadmap Funding 29
5.2.4 Adequacy of Roadmap Schedule 29
5.2.5 Recommendations 30

5.3 Calcine Retrieval and Handling 30
5.3.1 Technology Maturity 30
5.3.2 Completeness of Roadmap 31
5.3.3 Adequacy of Roadmap Funding 31
5.3.4 Adequacy of Roadmap Schedule 31
5.3.5 Recommendations 32

5.4 Pretreatment 32
5.4.1 Dissolution 33
5.4.2 Solid-Liquid Separations 34
5.4.3 Full Separations 36
5.4.4 UNEX Process Separations 37
5.4.5 Overall Pretreatment Recommendations 40

5.5 Vitrification 41
5.5.1 Technology Maturity 41
5.5.2 Completeness of Roadmap 48
5.5.3 Adequacy of Roadmap Funding 49
5.5.4 Adequacy of Roadmap Schedule 49
5.5.5 Recommendations 50

5.6 Secondary Waste Treatment and Disposal 51
5.6.1 Technology Maturity 51
5.6.2 Completeness of Roadmap 51
5.6.3 Adequacy of Roadmap Funding 52
5.6.4 Adequacy of Roadmap Schedule 52
5.6.5 Recommendations 53

6.0 Other Considerations 54

7.0 References/Bibliography 55

Appendix A – INTEC Calcine HLW Treatment Technology Roadmap Technical Assessment Review Team Statement of Work A.1

Appendix B – Resumes B.1

Appendix C – Review Agenda C.1

1.0 Introduction

1.1 Background

Approximately 4,400 cubic meters of calcine waste are stored in stainless-steel bins at the U.S. Department of Energy's (DOE's) Idaho National Engineering and Environmental Laboratory (INEEL). Calcine waste consists of a highly radioactive mixture of metallic oxides, fluorides, and other dry solids. Calcine was produced when liquid high-level waste (HLW) derived from the solvent extraction of uranium in dissolved nuclear fuel was thermally decomposed at 400° to 600°C.

Per an agreement with the State of Idaho, INEEL must convert all the stored calcine waste to a "road-ready" form for disposal offsite by December 31, 2035 (USFC 1995). As one of the necessary actions to comply with this date, the DOE Idaho Operations Office (DOE-ID) issued for public comment a draft environmental impact statement (EIS) that evaluated the impacts of various alternatives for treatment and disposal of the calcine waste and liquid sodium-bearing waste (SBW) stored in bins and underground tanks at INEEL (DOE 1999a).

In June 2000, at the request of DOE-ID, the Tanks Focus Area[1] (TFA) conducted an independent technical review of technologies under evaluation for the treatment of stored calcine and SBW (PNNL 2000a). The TFA review led to the recommendation that direct vitrification be considered the primary alternative for treatment of the liquid SBW. At the time of that review, sufficient information was not available to fully evaluate treatment alternatives for calcine waste.

In September 2000, DOE-ID requested TFA to review a technology development roadmap for direct vitrification of the liquid SBW. TFA issued an assessment of this roadmap in September 2000 (PNNL 2000c). Subsequently, the INEEL HLW Program prepared the *Draft Calcine Treatment Technology Development Roadmap* (Draft Roadmap) to evaluate alternatives for treatment of calcine waste using a vitrification process (Murphy et al. 2000). Although vitrification of calcine waste is the proposed primary treatment method, further technical evaluation is required to determine whether pretreatment of the calcine prior to vitrification should be performed. The Draft Roadmap defines a path forward to resolve major technical uncertainties and reach a final decision on selecting a calcine waste treatment process.

In January 2001, DOE-ID requested TFA to conduct an independent review of the Draft Roadmap. The review, documented in this report, is intended to assist DOE-ID and the INEEL contractor, Bechtel BWXT Idaho, LCC (BBWI), in validating the Draft Roadmap and ensuring that appropriate information is provided to support the EIS Record of Decision (ROD) on treatment of INEEL calcine and SBW.

[1] The TFA is DOE's national science and technology development and integration program for radioactive tank waste remediation.

1.2 Alternatives Considered in the Draft Roadmap

Two alternatives that involve separation of selected radionuclides from calcine, and one alternative that involves direct vitrification of calcine, are considered in the Draft Roadmap. The Draft Roadmap identifies these as Alternative A (Full Separations), Alternative B (Universal Solvent Extraction, or UNEX, Separations), and Alternative C (Direct Vitrification). These three alternatives are depicted in Figure 1.1 and include the following process steps:

Alternative A (Full Separations)

- Retrieve calcine
- Dissolve calcine and tank heels in nitric acid
- Separate undissolved solids (UDS) from liquid waste
- Separate cesium-137 (Cs-137) from the liquid fraction using cesium ion-exchange technology (CSIX)
- Separate transuranic elements (TRU) using the TRU solvent extraction (TRUEX) process
- Separate strontium-90 (Sr-90) using the strontium solvent extraction (SREX) process
- Vitrify separated radionuclides, undissolved calcine, and tank heel solids
- Treat vitrification off-gases
- Grout/treat off-gas scrubber wastes, separated mercury, spent solvents, ion exchange media, and dissolved calcine after separation of the radionuclides
- Provide interim storage of glass onsite, then dispose glass in the National Geologic Repository (Repository)
- Dispose of secondary radioactive waste onsite or at a low-level waste (LLW) disposal site.

Alternative B (UNEX Separations)

- Retrieve calcine
- Dissolve calcine in nitric acid
- Separate UDS from liquid waste
- Remove TRU and other radionuclides from the liquid fraction using the UNEX process
- Vitrify separated radionuclides, undissolved calcine, and tank-heel solids
- Treat vitrification off-gases
- Grout/treat off-gas scrubber wastes, spent solvent, and dissolved calcine after separation of the radionuclides
- Provide interim storage of glass onsite, then dispose glass in the Repository
- Dispose of secondary radioactive wastes onsite or at a LLW disposal site.

Alternative C (Direct Vitrification)

- Retrieve and blend calcine
- Vitrify calcine
- Treat vitrification off-gases
- Grout/treat off-gas scrubber wastes
- Provide interim storage of glass onsite, then dispose glass in the Repository

- Dispose of secondary radioactive wastes onsite or at a LLW disposal site.

Figure 1.1 Calcine Alternatives Flowchart
(Source: Murphy et al. 2000, with modifications)

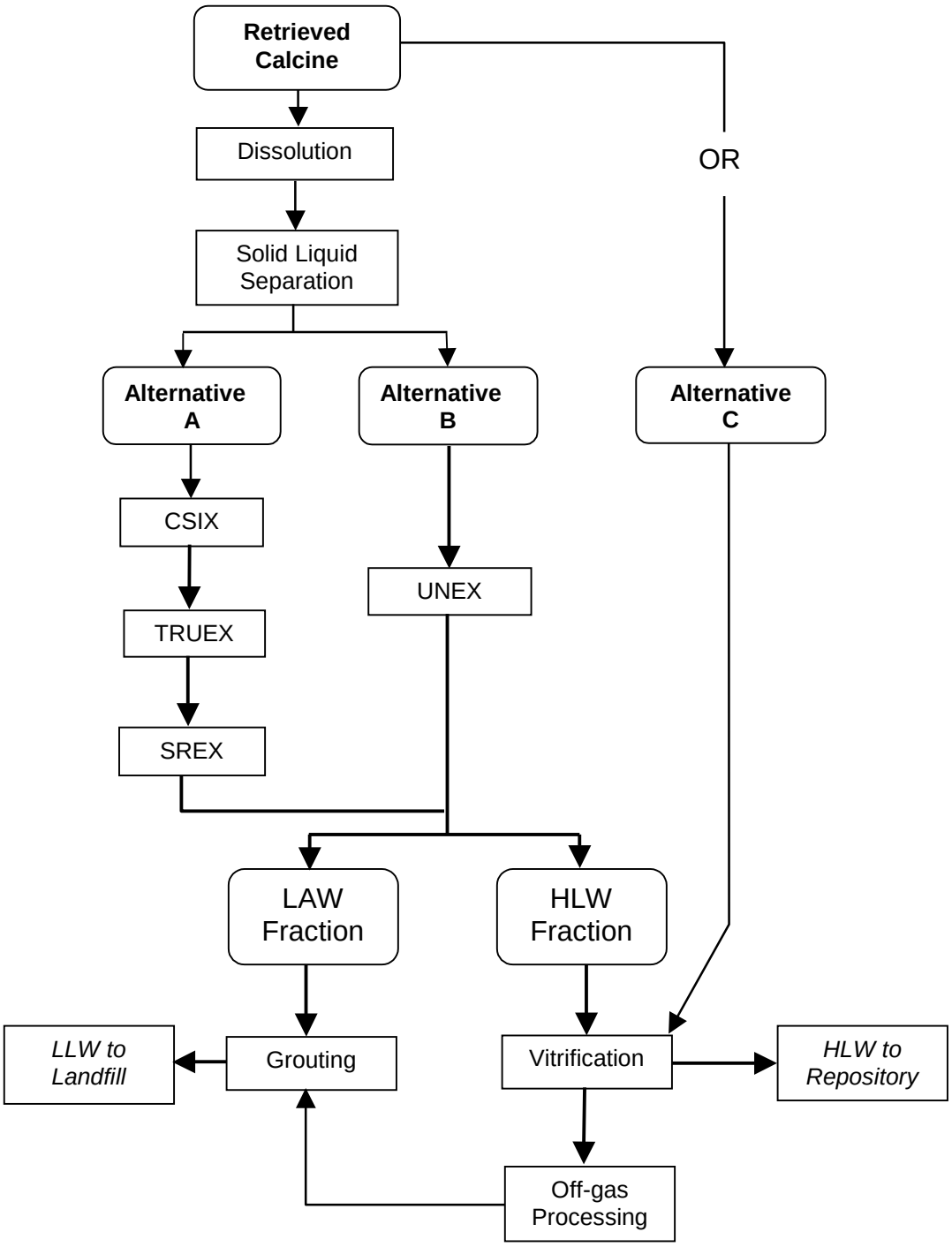

1.3 Review Panel Charter and Process

DOE-ID requested the TFA to assess the validity, feasibility, and completeness of the Draft Roadmap and to provide the results of the assessment and recommendations in a report. The Statement of Work for the assessment is provided in Appendix A. Objectives of the review included:

- evaluating the current status of research and development work, technical gaps and uncertainties, funding profiles planned to implement the Draft Roadmap, and timing of technology development activities;
- identifying economic incentives, if any, for pursuing the two Separations Alternatives versus the Direct Vitrification Alternative;
- evaluating economic factors regarding repository disposal; and
- assessing the path forward, timing, and ability of DOE-ID and BBWI to meet the proposed schedule for finalizing the decision for calcine treatment.

The TFA convened a panel of experts (Review Panel) consisting of eight members with expertise in the various technologies included in the three alternatives. Some of the Review Panel members participated in prior reviews of calcine and SBW treatment alternatives (PNNL 2000a and PNNL 2000c). Resumes of the Review Panel members are provided in Appendix B.

In preparation for the assessment, the Review Panel reviewed various background reports and documents on INEEL calcine waste, prior reviews and studies, and technology development related to proposed treatment methods (see Section 7, References and Bibliography). They then participated with BBWI staff in presentations and discussions in Idaho Falls, Idaho, between February 20 and 23, 2001. The review agenda and INEEL participants in these presentations and discussions are provided in Appendix C. Other Review Panel activities included consulting with several TFA Technical Integration Managers and Principal Investigators on technology maturity, status of development work to date, and related experience; and deliberations among the Review Panel members to establish consensus on conclusions and recommendations.

TFA program staff supported the Review Panel by assisting with planning, conducting, and documenting the review effort. The Review Panel and TFA staff members are listed below:

<u>Review Panel</u>

- Wallace W. Schulz, TFA Technical Advisory Group Chair, Team Leader
- Russell L. Treat, Consultant, Dade Moeller and Associates, Inc., Deputy Team Leader
- Clayton T. Crowe, Consultant, Emeritus Professor, Washington State University
- Joseph F. Ortaldo, Westinghouse Savannah River Company
- John H. Roecker, Consultant, TFA Technical Advisory Group Member

- Lawrence L. Tavlarides, Professor, Syracuse University, TFA Technical Advisory Group Member
- George F. Vandegrift, Argonne National Laboratory, TFA Technical Advisory Group Member
- E. Thomas Weber, Consultant, TFA Technical Advisory Group Member

TFA Staff

- Betty A. Carteret, TFA Technology Delivery Manager (Review Facilitator)
- Peter W. Gibbons, TFA Retrieval Technology Integration Manager
- C. Philip McGinnis, TFA Pretreatment Technology Integration Manager
- Cheryl L. Nickola, TFA Program Operations Office Manager
- David K. Peeler, TFA Principal Investigator (vitrification technology and glass formulation)
- Lynne R. Roeder-Smith, TFA Technical Communications Specialist
- Tom R. Thomas, TFA Characterization Technology Integration Manager
- Douglas C. Witt, TFA Principal Investigator (vitrification technology and melter testing)

1.4 Acknowledgements

The Review Panel greatly benefited from the contributions of numerous INEEL and TFA professionals, both in conducting the review and preparing the report. In particular,

- Joel Case, DOE-ID, for commissioning the review and providing guidance on its scope

- Tom Brouns, TFA Technical Team Manager, for organizing, chartering, and guiding the Review Panel throughout its tenure

- Betty Carteret, TFA Technical Team Member, for planning and facilitating the review process

- Cheryl Nickola, TFA Technical Team Member, for coordinating the Review Panel

- Lynne Roeder-Smith and Mary Ann Showalter, TFA Technical Team Members, for editing many drafts of this report

- Arlin Olson, James Murphy, and other BBWI engineers and staff, for preparing a well-organized, succinct Draft Roadmap, and responding fully and expeditiously to questions from the Review Panel.

2.0 Conclusions and Recommendations

This section summarizes the Review Panel's conclusions and recommendations, which were derived from review of the Draft Roadmap presentations by BBWI staff members, discussions between individual Review Panel members and BBWI personnel, and several executive sessions of the Review Panel. The conclusions and recommendations are divided into those considered "high-level" – relating primarily to key decisions called out in the Draft Roadmap – and those relating to specific technologies employed in the alternatives.

2.1 High-Level Conclusions and Recommendations

Overall, the Review Panel considered the Draft Roadmap to be more sophisticated than the first draft of the SBW Technology Development Roadmap evaluated previously for DOE-ID (PNNL 2000c). The Review Panel concluded that BBWI prepared the Draft Roadmap using a sound technical approach that, if implemented, can support defensible and successful decision-making on the disposition of INEEL calcine. Although most of the Draft Roadmap information is documented at a summary level, Review Panel discussions with BBWI personnel revealed that sound and in-depth logic was used in developing the path forward.

Two positive attributes of the Draft Roadmap worthy of highlighting are:

- Comprehensiveness – all major items were covered – no significant omissions were identified, and.

- Approach – the approach to define uncertainties and the work to resolve them was particularly good.

The Review Panel was concerned, however, that the summary-level definition of the three alternatives, and the work proposed to support decision-making, appeared inadequate for prioritizing the work, especially because the planned work did not appear to be realistically matched to the expected funding and staff resources, nor integrated with other ongoing INEEL programs. The Review Panel noted several areas where the Draft Roadmap requires careful attention:

- Cost Estimates: For some development tasks, cost estimates appear optimistically low, by at least a factor of two.

- Schedules: The Review Panel concluded that technology development schedules shown in the present Draft Roadmap are generally too aggressive and optimistic. The present schedules do not adequately take into account several real constraints (e.g., available budget, available personnel, and site integration issues). Hence, the full scope of work defined in the Draft Roadmap should be revised to complete all technology development by 2007 to 2009, rather than the 2005 date now planned. Also, the work should be further prioritized to focus on key tasks and critical uncertainties such that decision-making can be supported at the

earliest possible date, despite the constraints. Moreover, the schedules are apparently not linked across the different technology development boundaries. The development schedules should be internally linked, as well as linked to related site activities outside the jurisdiction of the INEEL HLW program.

- Nuclear Safety: The Draft Roadmap does not adequately address nuclear safety concerns. During technology development efforts, increased attention should be given to potential limits in future Safety Analysis Reports and Authorization Bases. The Review Panel concluded that early consideration of nuclear safety concerns will provide valuable input to all major Draft Roadmap decisions.

- Flowsheets: The preliminary flowsheets developed as a basis for the Draft Roadmap should be significantly enhanced to support decision-making. The Review Panel concluded that all constituents of concern in each unit of operation should be identified, and the range of uncertainty and variability in concentration of each constituent estimated.

2.1.1 Draft Roadmap Decision 1: Decide whether to pursue radionuclide separations alternatives to reduce HLW volume (Separations Screening Decision)

The first decision called out in the Draft Roadmap is to decide whether or not to exclude further development of Separations Alternatives and pursue only the Direct Vitrification Alternative. According to the schedule shown in the present Draft Roadmap, Decision 1 will be made in 2001.

The Review Panel understood that Decision 1 is a screening (go/no go) decision that will be made primarily on the basis of the potential life-cycle cost (LCC) avoidance resulting from reduced HLW glass volume that DOE could realize from implementing a Separations Alternative[2] rather than the Direct Vitrification Alternative. The Review Panel was informed that any cost avoidance resulting from separations processes must be on the order of $2B or more to warrant further development of one or both Separations Alternative(s).

BBWI personnel roughly estimated that development and implementation of a Separations Alternative would likely cost at least $2B. According to the Draft Roadmap, INEEL site personnel plan to work closely with the DOE Office of Civilian Radioactive Waste Management (OCRWM) to develop reliable LCC data on which to base Decision 1.

The Review Panel performed an independent economic analysis to establish the likelihood that pursuing development and implementation of a Separations Alternative would lead to a large Repository cost avoidance over the life cycle of the calcine

[2] Decision 1 will be based on an assumption that subsequent development has a high potential of identifying a viable separations process for removal of radionuclides from dissolved calcine. A final decision on selecting a specific Separations Alternative is made at a subsequent decision point.

treatment and disposal mission. This evaluation, summarized in Section 4, concludes that there could be a Repository cost avoidance to DOE of as much as $4B by using a Separations Alternative, provided that the final vitrified product from any of the three calcine treatment alternatives is eventually sent to a federal repository and commingled with commercial spent nuclear fuel. The results of the Review Panel's economic assessment were as expected, based on previous experience at other DOE sites in assessing the costs of various separations and direct vitrification schemes for treating and disposing of HLW stored in tanks. The present analysis confirms the high impact of Repository disposal costs on LCC.

As indicated in Table 2.1, a potential Repository cost avoidance of $4B is a strong incentive to develop and deploy a Separations Alternative rather than the Direct Vitrification Alternative. Some Review Panel members believe there are additional incentives for deploying a Separations Alternative, as shown in the table. Other incentives and disincentives are also shown to present a balanced view in support of decision-making. Concurrence was not reached among the Review Panel members on the list of incentives and disincentives, however.

Table 2.1 Separations Incentives and Disincentives

Separations Incentives	Separations Disincentives
1. Potential Repository cost avoidance of ~$4B.[(a)]	1. No assurance that potential cost savings will ever be realized.
2. Separations may provide more compositionally consistent feed streams for vitrification.	2. Dissolving calcine, a stable solid, reintroduces risk of liquid spills and leakage.
3. Liquid separations process wastes may be more compatible with SBW vitrification plant design.	3. Complexity of process and controls is higher.
4. Removal of mercury in separations process simplifies treatment of melter off-gases.	4. Separations processes are technically immature versus established vitrification process; higher potential exists for significant unanticipated costs.
5. Removal of noble metals in separations process precludes accumulation of noble metals in melter.	5. Presence of organics in melter feeds may raise significant safety and other operational issues.
	6. Large volumes of secondary waste grout are produced with no clear storage and disposal path[3].

(a) If final vitrified HLW is disposed in a federal HLW geologic repository. (Note: Projected LCC is approximately $2B lower than LCC for the Direct Vitrification Alternative based on current estimates.)

[3] Potential issues with long-term onsite storage of drums of grouted waste were a factor in recommending direct vitrification of SBW (PNNL 2000a).

Recommendations Concerning Decision 1:

- Proceed as expeditiously as possible with the OCRWM cost analysis, as outlined in the Draft Roadmap, to obtain detailed and reliable LCC data on which to base a definitive and defensible Decision 1. LCC data should be obtained for a broad range of calcine treatment and disposal scenarios to bound potential options that may be considered in future decisions.

- Develop a schedule and criteria for making Decision 1. The criteria for making a defensible decision should take into account

    - incentives and disincentives (see Table 2.1) for pursuing a Separations Alternative;

    - other cost avoidances (consider other options for treating and disposing secondary wastes produced by the Separations Alternatives, e.g., reassess the need to meet U.S. Nuclear Regulatory Commission [NRC] Class A requirements for disposal of LLW, and consider waste acceptance criteria at other LLW disposal sites); and

    - enhanced process flowsheets and revised facility cost estimates.

2.1.2 Draft Roadmap Decision 2: Select a preferred Separations Alternative

If Decision 1 results in pursuing further development of both Separations Alternatives, then a subsequent decision (Decision 2) must be made to determine which Separations Alternative should be developed further. According to the Draft Roadmap, Decision 2 will be made in 2005. The Review Panel spent considerable effort in evaluating whether Decision 2 could be made earlier than 2005, but could not identify a valid technical reason to reject either of the Separations Alternatives at this time. However, the Review Panel concluded that Decision 2 could be made as early as 2003 with a focused effort to develop the UNEX separations process.

Recommendations Concerning Decision 2:

- As part of the economic evaluations planned to support Decision 1, attempt to establish the difference in costs to implement the Full Separations Alternative or the UNEX Separations Alternative. The result of this evaluation could justify an early decision between the two Separations Alternatives. The lesser maturity of the UNEX Alternative must also be considered in decision-making, however.

- Closely examine the Draft Roadmap to identify those very high-priority technology development tasks whose completion will enable a defensible and potentially early decision between the UNEX Separations and Full Separations Alternatives. Because of extensive development of the Full Separations Alternative at INEEL, the Review Panel concluded that further development of

the Full Separations Alternative largely can be deferred until the UNEX Separations Alternative is brought to the same level of technical maturity.

- Further prioritize the proposed work and revise the Draft Roadmap to accelerate Decision 2 from 2005 to the end of Fiscal Year 2003. Ensure that all related critical vitrification technology development tasks needed to support the earlier decision date are also identified and completed.

2.2 Technology-Related Conclusions and Recommendations

The three alternatives are composed of different combinations of the following technology areas: characterization, calcine retrieval and handling, pretreatment (full separations or UNEX separations), vitrification, and secondary waste treatment. The Review Panel's conclusions and recommendations for developing these technology areas are summarized below.

2.2.1 Characterization

- Samples of calcine that have been stored for future testing and characterization are not adequate to support decision-making. A Data Quality Objectives (DQO) methodology to define plans for additional sampling and analysis of calcine, and possibly tank heels, should be established and used. The DQO methodology should be based on known and potential requirements derived from enhanced flowsheets, safety limits, process-efficiency limits, release limits, planned process tests, and glass-product and secondary waste acceptance criteria. In addition, the DQO methodology should address the need to define valid nonradioactive surrogate wastes for process testing.

- Additional sampling and analysis of the calcine and possibly the tank heels should be conducted as soon as practical using existing INEEL sampling and analytical capabilities and the DQO methodology. In view of the limited time and analytical resources available to support this activity, the bins (and tank heels, if necessary) should not be extensively sampled and analyzed at this time. Only the level of sampling and analysis necessary to support decision-making should be planned, and additional sampling and analysis will likely be necessary, under revised DQOs, to support subsequent design efforts.

- The magnitude of chemical and radiochemical variability within a single bin cannot be determined to the required levels of accuracy. Knowledge of variability is important to assuring that each blended batch of calcine or dissolved calcine will conform to the known or expected operating limits of the separations and/or vitrification processes. Conceptual blending systems for dry and dissolved calcine and a conceptual calcine retrieval and blending sequence should be defined to establish baseline sets of dry and dissolved calcine batches. The range of compositions and other characteristics for each batch for use in flowsheet development and process testing should also be defined. The ranges should be

periodically updated based on new characterization data and revisions to the retrieval and blending sequences, flowsheets, and conceptual process systems.

- The limited characterization resources at INEEL should be concentrated on additional sampling and analysis activities that impact decision-making. The quantity and variability of carbon concentrations, and the variability of mercury concentrations in the calcines, may be important parameters in the decision-making process. Optimized sampling plans should be formulated, but development of advanced sampling technologies should be deferred until final decision-making occurs.

2.2.2 Calcine Retrieval and Handling

- The need for grinding calcine as a preconditioning step for direct vitrification should be determined.

- Development of the calcine retrieval and handling system should be deferred until after final decision-making, as indicated in the Draft Roadmap, due to the likely absence of important issues that could adversely impact the viability of retrieving calcine from the bins.

2.2.3 Pretreatment

- A countercurrent laboratory test of the UNEX Separations Alternative should be conducted with actual dissolved calcine in April 2001, as planned. The Review Panel strongly recommends that testing include analysis[4] of all potentially important constituents in the various steady-state waste streams produced in the test. The results are critical for refining the flowsheets and supporting decision-making.

- An accelerated UNEX separations research program should be conducted with the objective of supporting and making Decision 2 by September 2003. Nearly all pretreatment funding should be directed to resolving the viability of the UNEX Separations Alternative and optimizing dissolution of calcine (including characterization of UDS). Batch distribution studies and simulant solutions should be used to determine the extraction behavior of all important calcine components and reagents employed in the UNEX Separations Alternative. An understanding of the extraction system should be gained through batch contact studies involving actual dissolved calcine and then by conducting two or three countercurrent demonstrations with selected actual calcine samples that bridge the compositional range of the various calcines. The commercial availability of UNEX solvent components should also be established.

[4] The Review Panel noted a concern that constraints in current funding levels to support INEEL-conducted UNEX development work may result in limiting planned countercurrent testing and analysis, which could result in the loss of critical data required to support both Decision 2 and direct future development work.

- Scoping studies to assure compatibility of the Separations Alternatives process waste streams with melter and glass performance requirements should be conducted. These studies should include development of enhanced flow sheets, evaluation of the need to destroy organics in the separations process waste that would be fed to the melter, and assessment of alternative solvent-strip reagents, if necessary, to reduce concerns about safety and process control. A conceptual means to monitor and control the composition of the solvents in the plant application should also be developed.

- Options to simplify the Separations Alternatives should be explored by determining if each of the various processing steps is needed to satisfy current and evolving waste acceptance criteria for disposing of product-glass and secondary waste.

2.2.4 Vitrification

- The economics of INEEL HLW processing and disposal are strongly dependent on the achievable waste loading in the glass. The basis for waste loading should be improved by developing enhanced flowsheets that include each constituent of concern in each unit operation of a given alternative. The flowsheet values for all three alternatives should be compared to known and anticipated limits for operating each unit operation, and adjustments made until compliance is achieved. The effects on waste loading in glass and LCC should then be re-evaluated.

- The flowsheet enhancement effort should be coordinated across the various technology development activities to ensure that testing in one technology area (e.g., vitrification) satisfies the flowsheet needs of the other areas. Also, detailed activity logics should be developed for each technology area and integrated to support schedule and flowsheet enhancement.

- Waste loadings in glass will be constrained by heat, radiation-dose, and temperature limits for the product-glass canisters. The radionuclide content of glasses produced in the Separations Alternatives should be estimated for the current flowsheets, and the associated heat contents, radiation doses, and temperatures determined and compared to the limits. Adjustments to the waste loadings in glass and LCC estimates should be made in time to support Decision 1.

- Significant safety and operational problems may be created in the vitrification process by the presence of high organic-carbon levels in the melter feed. A detailed listing of technical issues on organics in feed streams (especially for the separations processes) should be developed. The presence of high levels of mercury in the melter feeds in the Direct Vitrification Alternative may create corrosion and safety concerns. The organic and mercury issues should serve as a basis to define melting-feasibility tests that could be performed on

an accelerated schedule to support decision-making at the earliest practical date. Information on Russian glass-melting experiments using UNEX process strip solutions should be sought to enhance feasibility test planning. The tests should include an adequate series of supporting laboratory tests to evaluate separate effects of processing and expanded research-scale melter tests. Critical constituents of concern to off-gas treatment and secondary waste processing should be measured in the off-gases produced during these tests.

2.2.5 Secondary Waste Treatment and Disposal

- The compositions and quantities of all secondary waste streams should be estimated as part of the process to develop enhanced flowsheets. A limited set of grouting-feasibility tests should be considered, with a focus on those streams thought likely to be difficult to grout (e.g., those containing significant levels of dissolved organics). Interactions with disposal site operators and responsible federal and state agencies should continue to assure understanding of evolving disposal limits and to obtain commitments for accepting the wastes for disposal.

3.0 Draft Roadmap Approach and Bases for Review

This section describes the approach used by INEEL for developing the Draft Roadmap and the associated information used by the Review Panel as bases for their review.

INEEL personnel determined that guidance contained in *Applying Science and Technology Roadmapping in Environmental Management (Draft B)* was applicable to the preparation of a roadmap for selecting a calcine treatment alternative and developing a project to implement the alternative (Murphy 2000 et al.). They followed the four-phased process defined in the guidance document. This process, and the activities conducted to develop the Draft Roadmap, included the following:

- Phase I, Roadmap Initiation. Activities conducted in this phase included: developing an understanding of the charter, system boundaries, key drivers, and the EIS process; and selecting a team of 35 subject matter experts and facilitators to develop the roadmap.

- Phase II, Technical Needs Assessment. Activities conducted in this phase included: developing a simplified flowsheet for each alternative; identifying uncertainties within and between the unit operations that make up each alternative; and ranking the potential consequences associated with each uncertainty as high, medium, or low. The high-ranked consequences were defined as those that could result in a nonviable alternative; the medium-ranked consequences were those that could adversely impact the footprint of the treatment facility (and significantly increase the cost and schedule); and the low-ranked consequences were those deemed unlikely to impact system viability or the facility footprint, but could adversely impact the operating characteristics of the treatment facility.

  This phase also included the development of four decision points, namely Decisions 0, 1, 2, and 3.

  - Decision 0 represents near-term decision-making to be reported in 2001 in the EIS ROD. The need for much of the proposed roadmap activity will be eliminated if a single alternative is specified in the ROD. However, the ROD is likely to specify further development of all three alternatives.

  - Decision 1 (separations screening), if needed, will be based on a comparison of the disposal costs of the vitrified wastes produced by the three alternatives. Although not anticipated, Decision 1 could result in the selection of the Direct Vitrification (Alternative C) if the disposal costs for the separations alternatives are unfavorable, thereby negating the need for Decisions 2 and 3.

  - Decision 2 (separations alternative selection), if needed, will be based on the results of tests and other analyses defined in the roadmap to enhance

discrimination of the advantages and disadvantages of the two Separations Alternatives (Alternatives A and B).

- Decision 3 (separations or direct vitrification selection), if needed, will be based on the tests and analyses conducted to support final selection of a calcine treatment alternative.

- Phase III, Formulate Technical Response. Activities conducted in this phase included formulating work scope for resolving each uncertainty, logically relating the work and the decision points, and developing a logic-based schedule for completing the work and making the decisions.

- Phase IV, Resource Needs. Activities conducted in this phase included estimating resources (direct labor, non-labor, anticipated subcontracts, and associated costs) required to complete each identified activity. The estimated costs were compared to various funding profiles, and the schedules were then adjusted to match each profile.

The flowsheets developed in Phase II, and the work, schedules, and costs defined in Phases III and IV, served as primary bases for the Review Panel's review of the Draft Roadmap. To organize their comments, the Review Panel divided each of the three flowsheets (Figures 3.1, 3.2, and 3.3) into four technology areas: (1) Calcine Retrieval and Handling (comments are provided in Section 5.3); (2) Pretreatment (comments are provided in Section 5.4); (3) Vitrification (comments are provided in Section 5.5); and Secondary Waste Treatment and Disposal (comments are provided in Section 5.6). Comments on the need for an integrated, focused approach to technology development are discussed in Section 5.1, comments on calcine characterization are included in Section 5.2, and other considerations are included in Section 6.0.

Figure 3.1 Full Separations Flowsheet

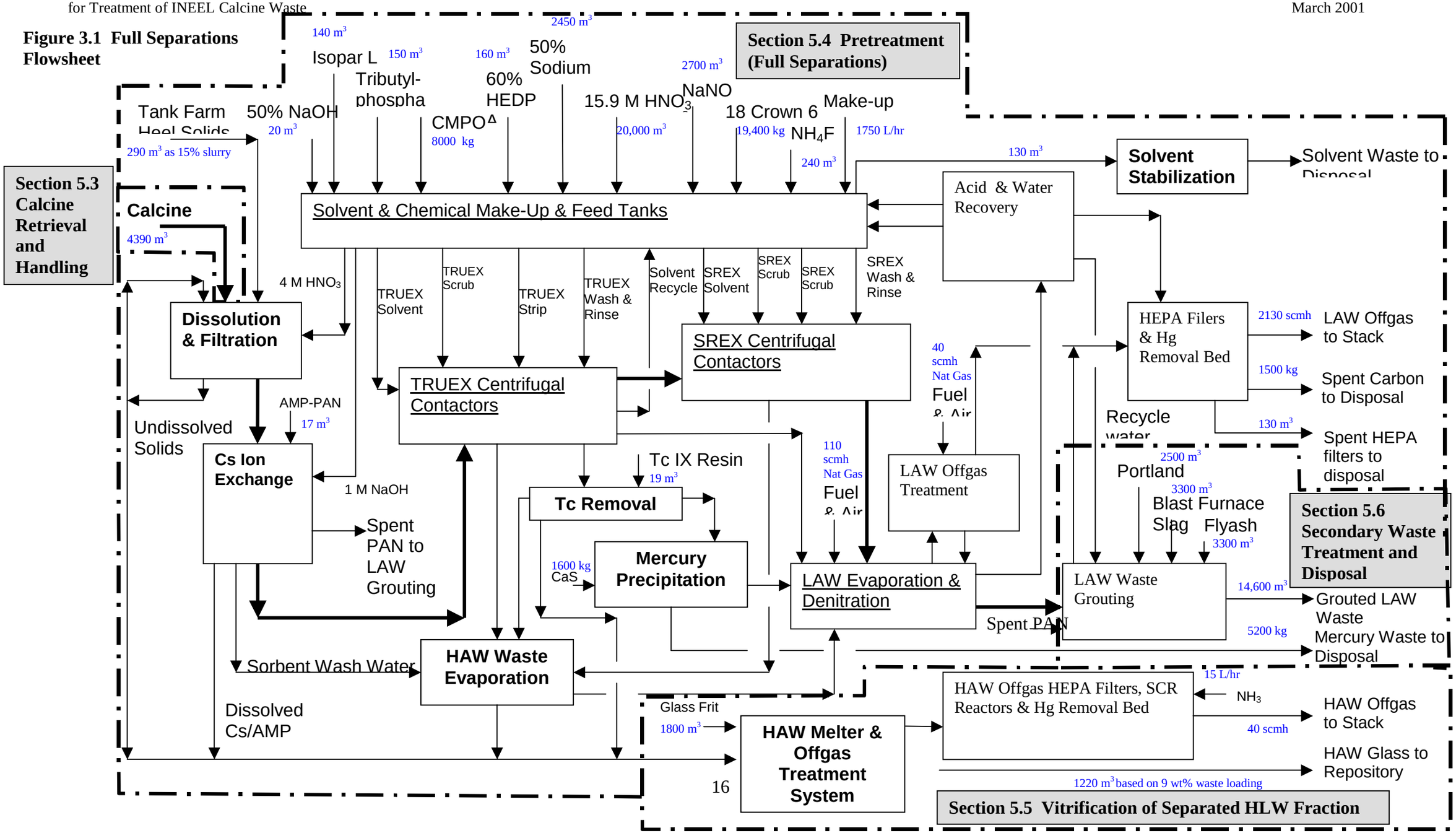

Figure 3.2 UNEX Separations Flowsheet

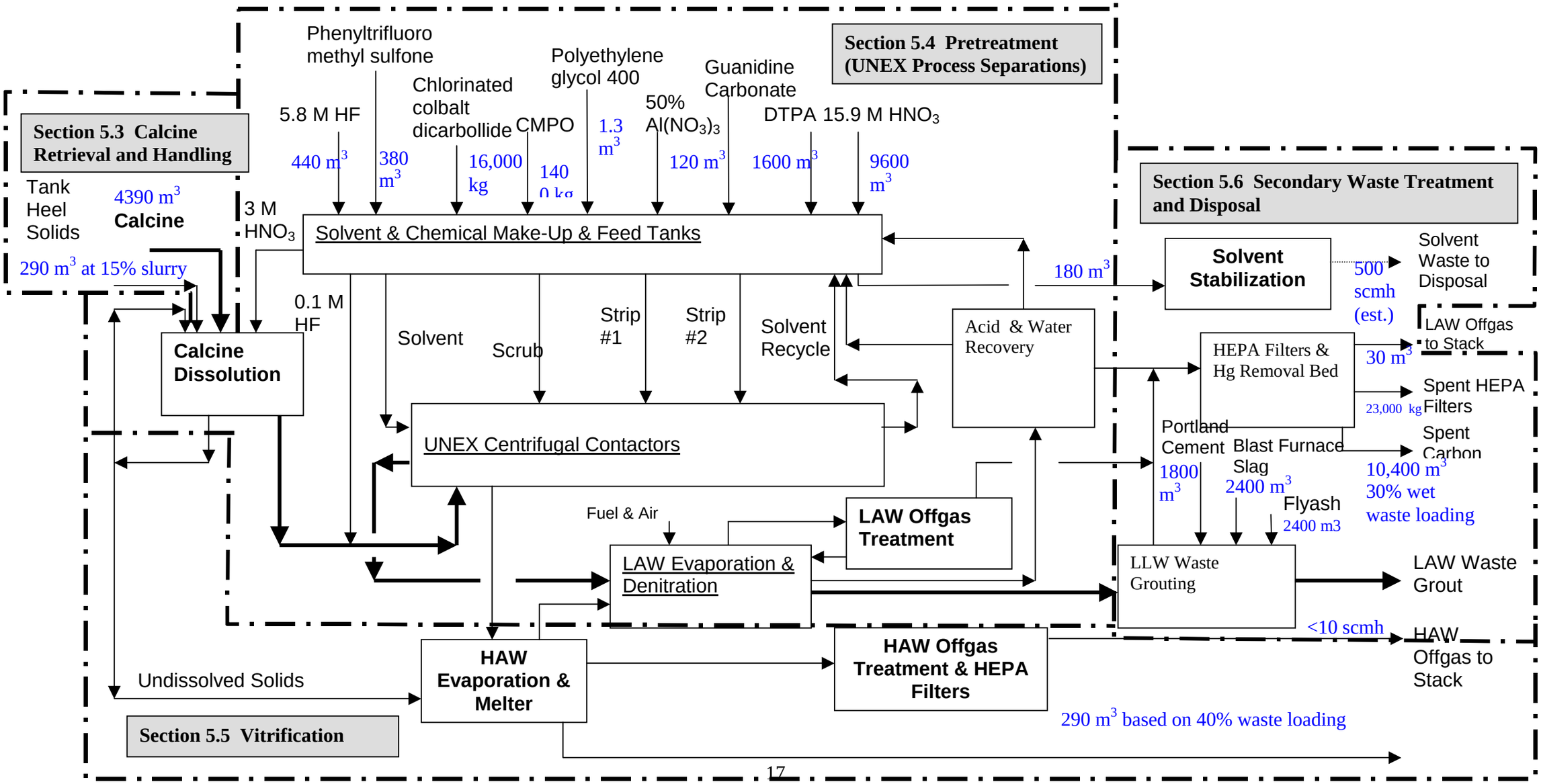

Figure 3.3 Direct Vitrification Flowsheet

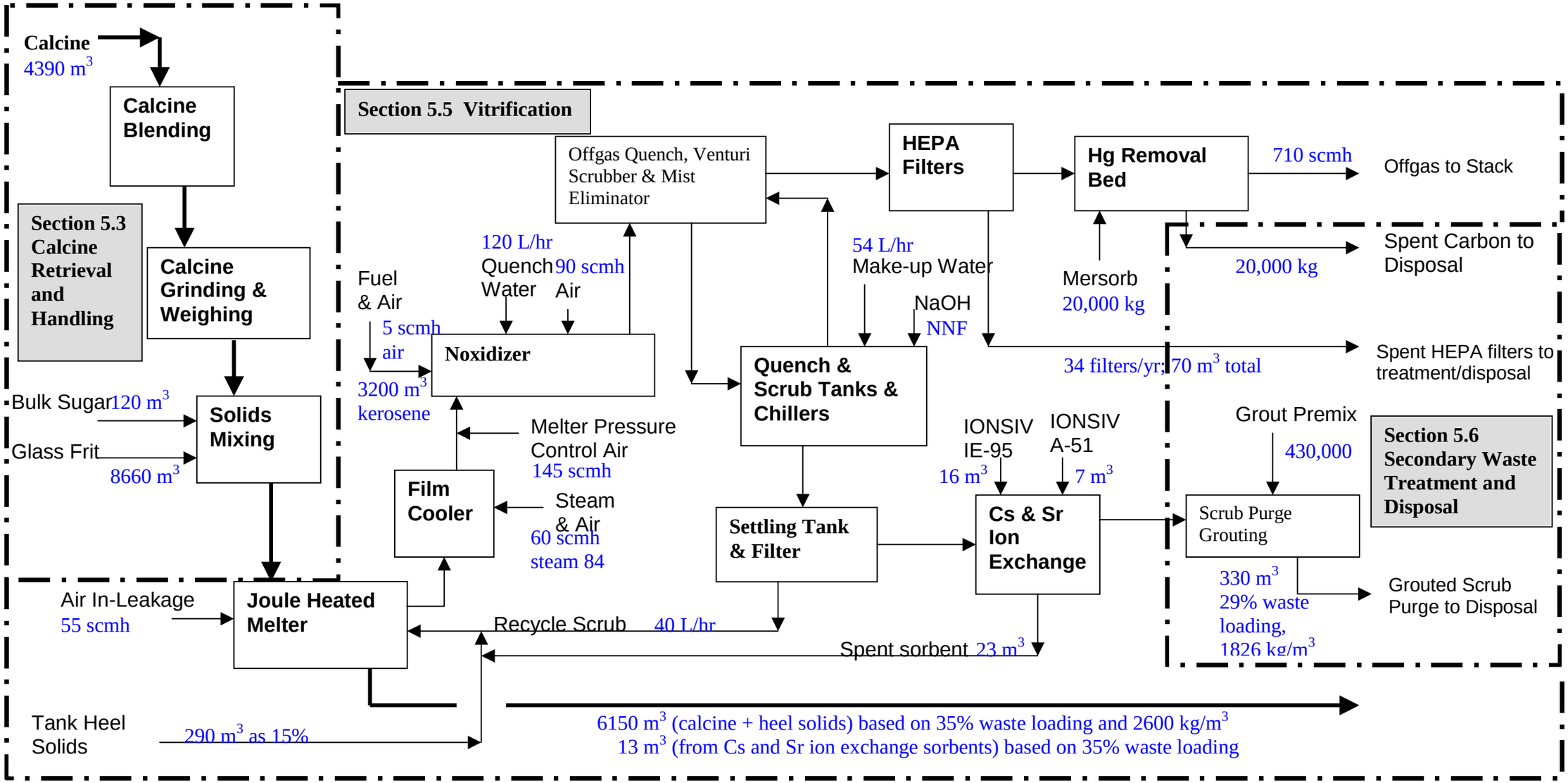

4.0 Economic Considerations

This section discusses economic factors that should be considered in decision-making. Key factors include costs for disposal of vitrified waste in the Repository, treatment facility construction and operating costs, and cost uncertainties.

4.1 Need for Definitive Repository Costs

A key basis for Decision 1, 2, and 3 is a clear and defensible LCC of each alternative. This is especially true for Decision 1, which is to be based on an early, over-arching economic analysis of the potential cost avoidance of Separations Alternatives that are projected to produce a smaller amount of vitrified waste requiring disposal in the Repository.

A major factor in the LCC is the unit cost for transporting and disposing of a U.S. Defense Program HLW glass canister in the Repository. The OCRWM periodically estimates the Total System Life-Cycle Cost (TSLCC) of the Repository and establishes the Defense Program's share according to a methodology published in the Federal Register (52 FR 31508). Table 4.1 summarizes that information for the last several years.

Table 4.1. Summary of Defense Program's Share of Repository Cost*

Year	TSLCC, $	Defense Programs Share, $	Defense HLW Canisters	Cost/Canister, $
1995 (DOE 1995)	33.1B	6.4B (19.4%)	18,000	360K
1998 (DOE 1998a)	43.8B	10.8B (24.7%)	23,600	460K
1999 (DOE-RW 1999b)	51.6B	14.5B (28.2%)	23,600	620K
2000	The draft 2000 TSLCC shows the Defense Program share approximately the same as shown in the 1999 draft.			

*Figures have not been adjusted for inflation, indicating the dollar value as of the year the estimate was prepared.

The U.S. Defense Program's share of the Repository TSLCC has increased considerably due to increases in the overall Repository program cost and increases in the quantities of defense HLW planned for disposal in the Repository. It should be noted that 1,190 INEEL canisters are assumed in both the 1998 and 1999 TSLCC studies. This relatively low volume of canisters indicates that a Separations Alternative was the basis for the studies. A specific OCRWM TSLCC study using a range of waste volumes for each alternative should be requested by INEEL to establish a realistic basis for the disposal costs for the alternatives. Use of a single-value unit-disposal cost for all alternatives could easily be misleading. The need for a realistic cost basis is readily evident from an OCRWM waste disposal study conducted for the Hanford Site (Hanford) in 1996, where the cost per canister varied by $100K for the cases studied (DOE 1997a).

4.2 Need for Refined Capital and Operations and Maintenance Costs

In addition to the Repository costs, the capital, operations and maintenance (O&M), and facility disposition costs for the alternatives must be examined to determine their impacts. The usual expectation with regard to the capital cost is that the alternative with the smaller waste volume would produce the lower cost. This is often the case; however, the INEEL approach currently

under consideration is to modify the SBW vitrification plant to support the subsequent calcine disposal mission. Due to the schedule driver to move forward with the SBW vitrification facility[5], the conservative approach being considered would likely include designing and building the SBW plant to accommodate the Direct Vitrification Alternative, without incurring significant facility upgrades or modifications at the time of initiating the calcine disposal mission. This being the case, the major driver for determining facility capital (i.e., facility footprint) will be established by the Direct Vitrification Alternative, and any cost avoidance of a smaller footprint required for a vitrification plant designed specifically for either Separations Alternative probably would not be realized. Some cost avoidance may still be realized from the smaller equipment associated with the smaller vitrification volumes, but it would be minor relative to other factors and would not be expected to influence the decision.

With regard to the O&M cost of the vitrification plant, it is again expected that a lower volume of vitrified waste means a shorter operating period and a resulting cost avoidance. However, this may not be so in the INEEL case because the overall system throughput for a Separations Alternative may be rate-limited by the processing of dissolved calcine through the complex solvent extraction steps. Because only preliminary processing rates have been determined for the alternatives, the impact of O&M costs on the LCCs is highly uncertain at this time.

Current INEEL cost estimates for vitrification plants are the same for all three alternatives (INEEL 2001a). It is expected that the impact of refined vitrification plant costs on the LCCs will be small and, therefore, differences in the costs of these plants should not be a driver in decision-making. The decontamination and decommissioning cost for the two Separations Alternatives and the Direct Vitrification Alternative will be relatively low, and thus will not be a factor in determining LCC.

4.3 Potential for Lower LCC of Separations Alternatives

Increases in the U.S. Defense Program's share of the TSLCC that have occurred over time would appear to make the Separations Alternatives more economically attractive. However, no such conclusion should be drawn until all aspects of the LCC estimates have been examined and the uncertainties in the LCCs understood. The volumes of waste for the three alternatives (both for HLW and low-activity waste), the uncertainties in the volumes, and the cost of implementing a Separations Alternative must be thoroughly analyzed and understood before meaningful decision-making can be achieved.

INEEL personnel have defined a limited set of "point values" for the individual waste streams in the three alternatives. The Review Panel is greatly concerned with the use of the point values for decision-making because the point value approach masks the high technical and economic uncertainty inherent in the alternatives. Although the Review Panel believes the use of the

[5] An agreement between DOE and the State of Idaho established the date to remove all SBW liquids from the Idaho Nuclear Technology and Engineering Center (INTEC) tanks by 2012. In order to meet this agreement, the necessary start date for SBW vitrification operations is estimated around 2008. This date drives a facility design schedule that requires footprint decisions to be made earlier than the calcine decision points selecting between separations or direct vitrification.

current point values is not defensible for decision-making, it does provide some insight into the magnitude of the potential cost avoidance by using a Separations Alternative. Table 4.2 summarizes the volumes of HLW glass generated and the costs of disposal in the Repository for the three calcine treatment alternatives based on the current point values.

Table 4.2. Disposal Costs for Vitrified HLW Calcine

Alternative	Volume, m^3 (Assumed Waste Loading, wt%)	Canisters[(a)]	Disposal Cost[(b)], $
Alternative A, Full Separations	1,220 (9%)	1,670	1.04B
Alternative B, UNEX Separations	290 (40%)	400	248M
Alternative C, Direct Vitrification	6,170 (35%)	8,440	5.23B
(a) Based on use of standard 0.73 m^3 Savannah River Site (SRS) canister (b) Based on 1999 TSLCC			

Table 4.2 shows a potential cost avoidance of approximately $4B for the Full Separations Alternative, and $5B for the UNEX Separations Alternative based on disposal costs alone. The use of such a high waste loading for the UNEX Separations Alternative merits some caution. Considering the possibility that repository heat-load and dose limits may be exceeded in the current separations process flowsheets, the use of high waste and radionuclide loadings for this and the Full Separations Alternative needs to be substantiated, particularly with regard to heat-generating radionuclides. If the waste loadings for either Separations Alternative were to significantly decrease for any reason, the cost avoidance attributed to the lower glass volume could be quickly negated.

Estimates of costs associated with implementing either Separations Alternative are likely to change significantly with refinement of both the flowsheets and the HLW and low-activity-waste volumes to be immobilized and disposed. Even so, some insight into the potential range of cost avoidance that may offset the expected additional cost of implementation can be obtained by using the results of a cost study performed in support of the INEEL EIS, as shown in Table 4.3 (DOE 1999a).

Table 4.3. Cost of Implementing Separations Systems

Separations Systems	Expected Cost, $
Separations Plant	2.11B
Grout Plant	574M
Grout Packaging, Transportation & Disposal	151M
Total	2.83B

Based on the cost data in Tables 4.2 and 4.3, and assuming that the costs of converting the vitrification plant are approximately the same for each of the alternatives, it is evident that the projected Repository cost avoidance may make the Separations Alternatives more economically attractive than the Direct Vitrification Alternative by approximately $2B.

However, if, as indicated earlier, the waste volumes and/or the cost of implementing the Separations Alternatives increases significantly, or if the waste volumes and/or the cost of the

Direct Vitrification Alternative were to decrease significantly, the cost avoidance would be negated.

4.4 Risk of Alternative Failure

Corporations frequently purchase insurance policies to protect against the failure of risky ventures. Russia recently purchased a $200 million policy to protect itself against potential damage when the spacecraft, MIR, eventually crashes to earth. The cost of this type of insurance is added to the total cost of doing business and is reflected in product prices.

All three calcine treatment alternatives pose a risk of failure. In the event of failure, the need for additional funding to retrofit the treatment facility or build a new one to successfully complete the mission is apparent. The costs of rebuilding or retrofitting the facilities after potential failures of the alternatives, and the probabilities of such failures, should be estimated. The value of the risk of failure of an alternative (rebuilding/retrofitting costs multiplied by the probability of failure) can be added to the LCC as a measure of the risk-adjusted cost of successfully completing the mission. The risk values may vary widely among the alternatives, and may be a significant contributor to the risk-adjusted LCC. The Review Panel recommends that an expert panel be commissioned at appropriate decision points to thoroughly investigate the technical uncertainty and safety of the alternatives, define the most likely and significant failure scenarios, and estimate the probabilities of failure and rebuilding/retrofittng costs associated with the failures. The value of the risk of the failures should also be estimated, and the risk-adjusted LCC should then be determined as one of the bases for decision-making.

4.5 Cost Conclusions and Recommendations

The potential for a significant economic advantage exists with the use of radionuclide separations technology. However, existing uncertainties point to the need for significant additional work to allow confidence in the selection of a calcine disposal alternative. The Review Panel recommends that the following actions be taken to support decision-making:

- INEEL should immediately initiate actions with OCRWM to refine and explore alternatives that may lead to lower Repository disposal unit costs. Different disposal approaches as well as different-size canisters should be explored.

- The flowsheets for the three calcine disposal alternatives should be enhanced in the following manner:

    - All chemical and radiochemical species of importance to solids dissolution and separations, radionuclide separations, and immobilization processes should be identified.

    - The range of chemical and radiochemical concentrations in conceptual batches of blended calcine and heels should be established.

- Each chemical and radiochemical species should be quantified and tracked through each of the processing steps to its ultimate end state.

- The uncertainty in the quantity of waste volumes should be calculated using the best available process design knowledge.

- All unit processes required for each alternative should be incorporated on the flowsheets (e.g., solids dissolution, solid-liquid separation, organic destruction).

- Unit processing rates for the separations plants need to be integrated with the vitrification plant processes so system throughputs can be established, and facility and equipment sizes can be consistently determined.

- Once the enhanced flowsheets are developed, equipment sizes should be estimated and conceptual facility layouts prepared.

- Revised LCCs should be prepared for each alternative using the enhanced flowsheets, equipment sizes, and conceptual layouts. LCC ranges should be prepared based on the uncertainties established during the flowsheet enhancement step.

- The risk cost of alternative failure (the insurance policy to guarantee success) should be estimated.

- The single-point value LCCs should be compared to the LCC ranges and to the risk-adjusted LCCs.

5.0 Assessment of Technologies

This section contains assessments of (1) the maturity[6] of the five technology areas employed in the three alternatives and (2) the completeness, funding, and scheduling of work proposed in the Draft Roadmap to address technical uncertainties associated with these areas. The five technology areas include characterization, calcine retrieval and handling, pretreatment, vitrification, and secondary waste treatment and disposal. The Review Panel's observations, conclusions, and recommendations on these technology areas were made without regard to potential funding limitations. Due to concerns that funding may not be adequate to support all of the work proposed in the Draft Roadmap, the first part of this section addresses work that the Review Panel believes should be emphasized. Detailed recommendations regarding this work are provided in the sections on the specific technology areas that follow.

5.1 Areas of Emphasis

The Review Panel is concerned that the current summary-level definition of the three alternatives and the work proposed to support decision-making may be inadequate for prioritizing the work, particularly because the work does not appear to be realistically matched to expected funding. The Review Panel also believes that the estimated cost to perform the work is low and will likely increase as detailed plans are developed. For these reasons, the Review Panel believes the proposed work must be further defined and prioritized to enable identifying and funding work that is deemed most critical to decision-making.

The Review Panel believes that the most critical work identified in the Draft Roadmap includes generation of detailed flowsheets; further characterization of calcine; and enhanced analyses of process feasibility and safety, leading to more defensible LCC estimates. The Review Panel also concluded that testing is essential for validating the detailed flowsheets, but funding limitations may dictate that the level of testing be reduced to small-scale tests focused on potential fatal flaws and issues whose resolutions may have major cost impacts.

5.1.1 Detailed Flowsheet Development

The Review Panel concluded that the flowsheets shown in Figures 3.1, 3.2, and 3.3 should be enhanced significantly by advancing the approach employed at INEEL in developing the Draft Roadmap. Detailed flowsheets are essential for defensible analyses of process feasibility, safety, and cost; these factors are critical for informed decision-making. The process used in developing the current flowsheets involved participation of subject matter experts who represented most of the key technical disciplines. Future involvement of nuclear safety, operations, and maintenance personnel in developing the detailed flowsheets is also essential, especially when identifying potential fatal flaws and opportunities for major cost impacts in the three alternatives. Due to the

[6] To assess technical maturity, the Review Team used the Stage/Gate methodology developed by the DOE Environmental Management Office of Science and Technology for describing various stages of development. The stages are: 1 - Basic Research; 2 – Applied Research; 3 – Exploratory Development; 4 – Advanced Development; 5 – Engineering Development; 6 – Demonstration; and 7 – Deployment (DOE 1997b).

absence of important test data to validate the flowsheets, best engineering and scientific judgment should initially be applied to define the likely ranges in concentrations of important chemicals and radionuclides across each unit operation in each alternative. The initial definition of these ranges would provide a baseline for changing the flowsheets and/or unit operations if necessary, and for planning fatal-flaw or major-cost-impact testing where the safety and practical operating constraints for a specific unit operation were found to be inconsistent with the flowsheets. This information should be used to support the many questions that will evolve regarding the robustness and safety of the processes, and the likelihood of these processes to accommodate variability in waste stream composition.

All waste and additive streams, including internal recycle streams, should be included in the detailed flowsheets, even if adequate data are not presently available to quantify all processing components. All bases and assumptions used for the detailed flowsheets should be documented in detail with adequate reference to supporting documentation. Periodically, these bases and assumptions and revisions to the flowsheets should be reviewed by outside experts to identify weaknesses and potential fatal flaws. INEEL has an excellent track record of involving outside expertise and should be encouraged to continue this practice. A change control system should be developed before any modification is made to the detailed flowsheets, and a change control board whose membership is composed of appropriate INEEL subject matter experts should approve any significant modifications to the flowsheets. The flowsheet bases and assumptions list should be updated after the modifications are approved and incorporated in the flowsheets.

5.1.2 Nuclear Safety Analysis

Nuclear safety-related issues should be systematically identified and resolved. This work should include preliminary analysis of those areas in which fissile, flammable, and explosive materials may be present. Identifying the presence of fissile materials is important for criticality control, and identifying the presence of flammable/explosive materials is important for analyzing potential accident scenarios that could result in unacceptable worker and offsite population exposures. Safety Analysis personnel should review these areas as soon as preliminary flowsheet data are available. Even minor flowsheet adjustments at the early stages of the project can have significant impacts on cost savings, added costs of safety-related items (e.g., Safety Class or Safety Significant Class capital equipment), and safety-controlled operating limits (e.g., technical safety requirements and limiting conditions for operations).

5.1.3 Compliance with Waste Acceptance Criteria

The expected ranges of chemical and radiochemical concentrations in vitrified HLW and LLW produced by each alternative should be compared to current and projected waste acceptance criteria for candidate waste disposal sites. These studies may reveal the need for major flowsheet changes to ensure that the waste products will be acceptable for disposal. INEEL staff should continue to interact closely with the State of Idaho and those responsible for changing and setting solid waste acceptance criteria to ensure awareness of potential future product specification limits.

5.1.4 Enhanced Characterization

The Review Panel concluded that additional characterization of the calcine and perhaps the tank heels is essential to decision-making, even if the budget is tightly constrained. A rigorous application of the DQO process will be key to prioritizing which samples to collect and analyze. The DQO process and the detailed flowsheets should be used together to evaluate the impacts of all likely operating, safety, and permitting limits, and treated waste acceptance criteria for the purpose of identifying sensitive waste components for which better data are required. INEEL staff should review operating, permitting, and safety limits (including technical safety requirements and limiting conditions for operations) at the SRS Defense Waste Processing Facility (DWPF), West Valley Demonstration Project (WVDP), and Hanford Waste Treatment Plant as a basis for establishing preliminary limits for treating the calcine. Other factors that should be addressed in implementing the DQO process and prioritizing which samples should be collected and analyzed include non-standard events that may have occurred during operation of the Calciner facility – such as startup when substantial quantities of nonradioactive chemicals were processed – and other events when control of the ratios of HLW calciner feed to process additives was poor or temperature and fluidizing gas control was marginal.

5.1.5 Process Feasibility, Safety, and LCC Evaluations

Enhanced descriptions of the hardware (e.g., approximate sizes, materials of construction, temperature ranges, and pressure ranges), process control schemes, areas of remote operation and maintenance, required system availabilities, and other important parameters should be prepared. These descriptions should be used with the detailed flowsheets; preliminary operating, permitting, and safety limits; and waste acceptance criteria as bases for refining LCC estimates to evaluate whether the alternatives are feasible and whether Authorization Basis limits may constrain the ability to operate efficiently. Reviews of the evaluation should be conducted by appropriate technical experts, then by a senior management team, to determine if sufficient evidence exists to make Decision 2 or Decision 3 earlier than scheduled.

5.1.6 Testing Based on Potential Fatal Flaws and Large Cost Impacts

Testing of the treatment processes, with simulated waste and with actual waste at various scales and at various levels of integration of the various processing components, was recognized by the Review Team as important to developing a sound basis for decision-making. However, such testing would likely consume the majority of the funding available for performing the Draft Roadmap activities leading to decision-making. If the funding becomes severely constrained, testing should focus on issues that could render an alternative nonviable or much more or less costly than previously assumed. A process for identifying potential fatal flaws and issues that have potentially large cost impacts should receive priority in the interest of expediting decision-making.

5.2 Characterization

This technology area is composed of two primary unit operations: sampling and analysis. Each of these unit operations is used in the three treatment alternatives.

5.2.1 Technology Maturity

Sampling and characterization technologies are available and have been previously implemented at INEEL. As evidence, calcine was successfully sampled over the full height of two bins in Calcined Solids Storage Facility (CSSF) #2 in 1978; heel solids were successfully sampled from three tanks using the Light Duty Utility Arm; and the analytical laboratory at INEEL has demonstrated the capability to analyze all or nearly all of the waste constituents likely required to support decision-making.

Some additional development may be required to support post-decision design and process planning. For example, some CSSFs are apparently not equipped to support the operation of push-type cone penetrometer samplers that may be useful for providing better evidence of waste caking and, if equipped with Laser Induced Breakdown Spectroscopy as proposed by INEEL, high definition of waste chemical variability over the full height of the bin. More refined analytical methods also may be required to measure concentrations of trace organic chemicals of regulatory interest. The Review Panel believes it is likely that issues related to highly enhanced definition of calcine chemical variation and presence of trace organics will not require resolution to support decision-making. However, these issues probably should be pursued during conceptual and detailed design.

5.2.2 Completeness of Roadmap

The work proposed in the Draft Roadmap is divided into two parts. The first part involves performing additional assessments of waste compositions predicted by process knowledge, existing analytical data, and additional analyses of available calcine samples. This effort is intended to increase confidence in the validity of compositions used in flowsheet development and the compositions/characteristics of surrogates used in process testing. The second part of the work is to identify and develop an optimized method for sampling of the calcine bins and to initiate sampling where the greatest uncertainties are present. The Review Panel recommends that activities related to developing and implementing new sampling and analysis methods be deferred until required to support detailed design in order to make best use of limited resources for decision-making.

Although the proposed characterization work may be adequate to support decision-making, the Review Panel believes that further characterization of the calcine and heel waste is needed. Issues of primary interest are the need to identify and quantify constituents of processing and safety concern, and the need to validate the magnitude of chemical and radiochemical variability in the bins and tanks.

Waste constituents likely to be of concern are those expected to exist at concentrations that may create significant challenges for safely and/or effectively operating the unit operations included in an alternative. Incompletely oxidized carbonaceous residues from the combustion of kerosene in the calciners may be an example of a constituent for which very little data exist. Carbonaceous residues may adversely impact the ability to control redox conditions in the Direct Vitrification Alternative, and may foul ion exchange resins and solvents in the Separations

Alternatives. Mercury may also exist at levels that may cause severe corrosion problems and the potential for explosive reactions. Mercury levels strongly depend on the operating temperature of the calciner when the calcine was produced.

Only limited sampling and characterization of the calcine and heel waste has been performed to date. INEEL staff members have estimated the locations of layers of different calcines and chemical additives, and the compositions and quantities of calcine and heels in the various CSSFs and tanks. These estimates were based largely on process knowledge and analyses of the liquid wastes fed to the calciners and tanks. Because defensible data on only a limited set of constituents exist, INEEL personnel applied best engineering judgment and conservatism to estimate the quantities and concentrations of many waste species. The resulting estimates may overstate or understate the challenge in planning how to handle constituents that may significantly impact waste processing.

The Draft Roadmap does not explicitly mention the methodologies that will be used to plan the characterization activities and obtain the data needed to determine process viability and to support decision-making. Planning and definition of waste characterization requirements at a number of DOE sites have been accomplished using the DQO methodology. This involves a formalized process to relate clearly identified requirements for application of data to the planned sampling and analytical work. The flowsheet enhancements discussed in Section 4 under "Cost Conclusions and Recommendations" are key to the DQO methodology. Specific constituents are included or excluded from analytical plans, depending on whether they meet criteria for impact on program objectives. This formalism, if applied correctly with the appropriate participation of users of the characterization data, can usually assure a highly cost-effective application of characterization resources. However, if not handled properly, the DQO methodology may cause valid technical factors to be disregarded if criteria are not well-chosen. Experience in applying the DQO process should be tapped by INEEL to ensure cost-effective characterization of the calcine and the tank heels.

The Review Panel observed that significant variability in the compositions of constituents may exist within CSSFs and individual bins due to several factors besides the source of waste fed to the calciners. These factors include the presence of nonradioactive, calciner-startup materials in layers in the bins; variability in the rates at which fuel, process additives, and wastes were individually fed to the calciners; and changes in processing parameters. Process changes included replacing an externally heated calciner with an internally heated, fuel-fired calciner, and increasing the set-point calcination temperature from 400 ^{o}C to 500 ^{o}C.

The calcines produced in the externally heated calciner will not contain carbonaceous residues, as might be expected in calcines produced using kerosene-fired calciners. Kerosene-fired calciners were used to produce the bulk of the calcine. An opposite relationship is expected for mercury. Mercury levels are expected to depend on the operating temperature of the calciner, with higher-temperature calcines having the lowest levels of mercury.

Variability and uncertainty in the concentrations of key waste constituents may have a large impact on LCC and the viability of a calcine processing alternative. High variability and uncertainty in the waste composition may also require the treatment processes to be operated far

below optimum levels to assure safe and efficient operation. This could result in significantly higher LCCs. The use of blending tanks would enable mixing dry or dissolved calcine to dampen out peaks in chemical concentrations. The implications of providing a significant blending capability should be addressed in the evaluation of calcine process alternatives.

Only a limited quantity of sampled calcine is available at INEEL to support better definition of the composition of calcine and its potential variability in retrieved batches. Sufficient quantities of alumina, zirconia, and fluorinel calcines are available for analysis, but the samples of each of these types of calcine apparently have been homogenized and thus are not suitable for analyzing variability.

Several key uncertainties cannot be adequately addressed with the current calcine samples:

1. The magnitude of chemical and radiochemical variability within a single bin cannot be determined. This is important in assuring that the chemical and radiochemical compositions of blended batches of calcine or dissolved calcine are likely to fall within the known or expected operating limits of the separations and/or vitrification processes.

2. The average level and variability of carbon concentration, and the variability of mercury concentrations, cannot be determined. This is important for identifying the potential requirements for removal and blending processes.

3. The potential for caking of the relatively small quantity of calcine derived from SBW – the type of calcine most likely to exhibit caking tendencies – cannot be addressed. This is important for verifying that this calcine can be successfully retrieved and blended with other wastes. This would also minimize the range of waste compositions fed to the treatment process, and ultimately the LCC.

5.2.3 Adequacy of Roadmap Funding

The estimated cost (~$4M) for completing waste characterization activities up to Decision 3 appears reasonable; however, a detailed breakdown of these resources was not provided to the Review Panel. The Review Panel believes it will be important to apply the bulk of this funding to improving the quality of calcine characterization data that most impacts the flowsheets, LCCs, and decision-making. Resources allocated to developing new and optimized sampling methods and equipment should be limited in the near term. The program should plan for a ramp-up of sampling and characterization activity and associated funding once Decision 3 is made.

5.2.4 Adequacy of Roadmap Schedule

Activities for updating best estimates of calcine composition and characteristics are scheduled to be completed by January 2002. No additional characterization activities are scheduled until the middle of 2004. These additional characterization activities are part of a program to develop a new sampling system and deploy it to obtain new calcine samples. This schedule implies that no additional data from new samples will be available to support decision-making.

The Review Panel recommends that additional targeted sampling and analysis of the calcine and possibly the tank heels be conducted as soon as practical, based on existing INEEL methods and the DQO methodology. In view of the limited time and analytical resources available to support this activity, the Review Panel also recommends that the bins (and tank heels if necessary) not be extensively sampled and analyzed at this time. INEEL should plan to conduct only the level of sampling and analysis necessary to support decision-making since it is likely that additional sampling and analysis will be necessary under revised DQOs to support design efforts. Sampling using improved methods may be required at that time to adequately analyze variability in calcine properties.

5.2.5 Recommendations

- Establish and use a DQO methodology to define sampling and analytical plans for the decision-support phase. Ensure that the DQO methodology is based on known and potential requirements derived from enhanced flowsheets, safety limits, process-efficiency limits, release limits, and process tests and glass-product and secondary waste acceptance criteria. Also ensure the DQO methodology addresses the need to define valid nonradioactive surrogate wastes for process testing.

- Define concepts for dry and dissolved calcine blending systems and a conceptual calcine retrieval and blending sequence to establish a baseline set of "calcine waste feed" types. Define the range of compositions and characteristics for each feed type for use in flowsheet development and process testing. Include plans for periodic updates to the ranges based on new characterization data, as well as revisions to the retrieval and blending sequences, flowsheets, and conceptual blending systems.

- Concentrate characterization resources on additional near-term sampling and analysis activities that impact decision-making. Develop plans to develop optimized sampling systems, but defer implementation of the plans until final decision-making occurs.

5.3 Calcine Retrieval and Handling

This technology area is composed of three primary unit operations: (1) pneumatic calcine retrieval and transport technology, which is used in each of the three alternatives; (2) calcine grinding; and (3) calcine blending technology. The latter two unit operations are utilized only in the Direct Vitrification Alternative.

5.3.1 Technology Maturity

The unit operations and associated technologies identified in this technology area are widely used in industrial applications. The pneumatic transport of HLW calcine has been an integral and successful part of INEEL's calcination systems for more than 30 years. The pneumatic retrieval of simulated calcine from a mockup bin of CSSF #1 has also been successfully demonstrated (PNNL 2000a). The potential for caking of calcines (SBW calcines, in particular) has been hypothesized. Caking could compromise the effectiveness of pneumatic retrieval and

transport systems, however, the limited available data on actual and simulated calcines indicate little cause for concern (NAS 1999).

Grinding and blending of dry, granular, highly radioactive solids has not been implemented on a production scale. Even so, a variety of industrially proven technologies are available that the Review Panel believes can be adapted to safe, remotely-operated applications for processing HLW calcine. Glass experts on the Review Panel also believe that grinding of the calcine (with or without glass formers) may not be required to produce a high-quality glass. HLW glass production facilities in the United Kingdom and France do not employ grinding (nor batch blending of calcines) in their processes, although glass quality standards in those countries differ from those of the U.S.

5.3.2 Completeness of Roadmap

The Draft Roadmap's calcine retrieval and handling activities include an assessment to define the amount of calcine that must be retrieved and an assessment of unique retrieval uncertainties that may exist after optimized sampling. The Draft Roadmap also identifies six medium-consequence uncertainties and one low-consequence uncertainty. No uncertainties that may compromise the viability of the retrieval and handling system were identified. The Review Panel agrees with these uncertainties and their ratings, with one exception – the reported need for retrieval of calcine from multiple bins to achieve feed blending. Blending by simultaneous retrieval from two bins will not provide a reliable mixture because the flow rate from each bin is not controllable. Blending will have to be carried out by sequentially transferring calcine in individual bins to weighing vessels. The contents of the weighing vessels should be discharged into a tank for dissolution, as with the Full Separations and UNEX Separations Alternatives, or into a dry blending system, as may be the case with the Direct Vitrification Alternative.

5.3.3 Adequacy of Roadmap Funding

The estimated cost ($51K) for resolving the calcine retrieval and handling uncertainties for decision-making appear reasonable. Funding to determine whether the calcine needs be ground to produce a glass of adequate quality (a low-consequence uncertainty) should be determined based on requirements established for work planned for the vitrification area (Section 5.5).

5.3.4 Adequacy of Roadmap Schedule

The proposed schedule shows the calcine retrieval work performed over a six-week period during 2010. This schedule exceeds the latest expected date for Decision 3 by three years. The Review Panel concurs with the schedule because neither the work nor the uncertainties are likely to impact decision-making, with one exception – blending concepts are needed to aid in defining the compositional range of feed batches. This need was discussed in section 5.2.

5.3.5 Recommendations

- Evaluate the need for calcine grinding under testing planned in the vitrification area.

- Delete the uncertainty (and any implied plans) to achieve blending by the simultaneous retrieval of calcine from two bins. Simultaneous retrieval to achieve blending is not feasible.

- As shown in the Draft Roadmap, defer further development of the calcine retrieval and handling system until after final decision-making. The Review Panel concurs with the schedule shown in the Draft Roadmap because the uncertainties associated with retrieval and handling can likely be resolved during the design phase.

5.4 Pretreatment

This technology area is composed of four parts: dissolution, solid-liquid separations, full separations, and UNEX process separations. The Review Panel's assessments of the maturity of technology and the completeness, funding, and scheduling of work for each subsystem are presented in the following subsections. Overall pretreatment recommendations are provided in the final subsection.

The overriding driver for pretreating calcine is to avoid as much of the cost associated with disposal of large volumes of HLW glass as possible. As shown in Table 4.2, implementing the Full Separations and UNEX Separations Alternatives potentially could lower the HLW glass volume from 6170 m^3 to 1220 m^3 and 290 m^3, respectively. Other benefits of pretreatment are as follows:

- The pretreatment system's product stream, which would be fed to the glass melter, is an aqueous, acidic stream, as is the melter feed stream in the SBW vitrification process. Thus, the SBW vitrification process may be more compatible with the Separations Alternatives than with direct vitrification of dry calcine.

- The separations processes remove primarily products of nuclear reaction, e.g., TRU, rare-earth elements, strontium, barium, and cesium from dissolved calcine solutions. Because of the low extractability of major dissolved components of the calcine (e.g., aluminum, calcium, zirconium, fluoride, mercury, and sulfate), the aqueous feed to the melter will be of similar composition whether the feed to the dissolver is zirconium-, aluminum-, fluorinel-, or SBW-calcine; dissolved tank heels; or a mixture.

- Mercury presently in the calcine and tank heels would be removed prior to vitrification and thus not be fed to the melter at concentrations that could result in excessive corrosion of the off-gas system.

- The concentrations of noble metals would be significantly reduced in the melter feed. This could potentially increase melter life and reduce redox-control concerns in the melter.

However, the near-term costs associated with building a pretreatment facility to house the separations processes may offset the long-term potential cost avoidance projected from lower glass volumes and reduced need for dealing with mercury and noble metals in the vitrification process.

5.4.1 Dissolution

This part of the pretreatment technology is composed of a single primary unit operation: nitric acid dissolution. A high degree of dissolution of calcine and tank-heel waste is required for effective pretreatment of calcine. Because only about 4 wt% of the dissolved calcine feeds to the melter, and because none of the feed materials significantly constrain waste loading in glass, the UDS fraction (which would also be fed to the melter in the Separations Alternatives) may be the controlling factor in the volume of glass produced. A fully integrated process flowsheet model is required to determine the relative quantity of the UDS that would begin to affect glass volume. Limited studies have been performed at INEEL on dissolving calcine using nitric-acid solutions at 90 to 95°C (PNNL 2000a). Dissolution has not been optimized and characterization data on the UDS is minimal.

5.4.1.1 Technology Maturity

Dissolution of spent nuclear fuel using boiling nitric acid has been practiced at Hanford, SRS, and INEEL for decades as part of fuel reprocessing operations. It is still practiced in Europe and Asia. Methods for fully dissolving fuel materials have been developed (Chamberlain et al. 1990), establishing dissolution of spent fuel is a mature technology. Although methods to dissolve solids such as spent fuel are at the deployment stage, the limited data for dissolution of calcine places it in the Stage 3 – Exploratory Development phase where additional work in laboratory-scale testing and identification of functional and performance requirements is needed to establish process feasibility for this application (DOE 1997b).

5.4.1.2 Completeness of Roadmap

The activities proposed for resolving uncertainties associated with calcine dissolution include a study of the dissolution behavior of actual and simulated calcines and developing and validating a calcine solubility model. The detail provided in the Draft Roadmap is not sufficient to ascertain that the planned efforts will address all of the key uncertainties. However, as a result of discussions with the INEEL researchers, the Review Panel believes that they understand the needs and are highly qualified to resolve them. The Review Panel agrees with the list of key uncertainties in the Draft Roadmap, but believes that one of the key uncertainties, “Characterization (physical and chemical) of UDS from dissolution”, should be raised from the medium-consequence to the high-consequence level. Knowing the amount, and the chemical and physical characteristics, of the UDS is essential to developing a sound integrated flowsheet and for understanding the requirements for vitrifying the pretreatment streams. Some members of the Review Panel also believe it is important to understand the mass ratio of UDS chemicals and separated radionuclides and chemicals, and their variabilities, in order to determine the difficulty of defining the correct proportions and chemistry of glass-forming additives on a batch-by-batch basis.

5.4.1.3 Adequacy of Roadmap Funding

The funding level for dissolution ($577K) appears to be appropriate based on the relevant experience of Review Panel members.

5.4.1.4 Adequacy of Roadmap Schedule

The schedule (62-week duration with completion by December 2004) seems reasonable. The Review Panel believes it is likely that the required time for chemical analysis will be the schedule driver, not the dissolution studies themselves.

5.4.1.5 Recommendations

Optimization of dissolution should be undertaken based on conditions that have been used successfully for dissolving irradiated fuel in reprocessing plants. The primary goal of this work would be to develop a dissolution process that would assure high dissolution of all solid feeds and produce UDS of known composition. Experiments should be performed with a wide compositional range of calcines. Chemical and mineralogical characterization should meet the needs for developing the vitrification system and should be based on a thorough DQO assessment. The experimental scale should be increased after decision-making to the point that enough UDS will be produced to support meaningful filtration tests.

5.4.2 Solid-Liquid Separation

This part of the pretreatment technology is composed of a single, primary unit operation: filtration. Solid/liquid separation is required prior to radionuclide separations because (1) residual solids in the dissolved calcine or tank heels could be enriched in strontium and TRU components, resulting in sufficient contamination of secondary wastes that removal of ~99.999% would be necessary to meet Class-A low-level waste requirements; (2) operation of ion-exchange columns could be impaired by plugging pores with solids; and (3) operation of solvent-extraction units could experience excessive buildups of crud that cause hydraulic problems and, therefore, process upsets.

5.4.2.1 Technology Maturity

Solid-liquid separation tests involving crossflow filters were successfully performed at INEEL using dissolved actual calcine and dissolved nonradioactive pilot plant calcine (Mann and Todd 1998). Crossflow filtration is used commonly in industrial applications. An analysis of the filter surface area required for plant operation of a Cells Unit Filter (CUF) at INEEL was also made (Tripp and Wade 1997). No work was reported for other types of filtration.

The Mann and Todd studies are promising, but it is not clear that they actually measured the approximate 10^5-removal fraction claimed for 0.19- and 7.94-wt% slurry. They measured solids “retained” and not “passed through” the filter, and the lack of replicate runs leaves accuracy and precision unknown. As part of the development effort for salt

waste treatment at SRS, that site is currently testing crossflow filtration at the laboratory scale on actual waste that may be similar to dissolved calcine. Only limited success in large-scale testing with simulants at 0.06- to 0.6-wt% solids with fluxes of 0.02 GPM/ft^2 (DOE 2000) has been reported. No other solid-liquid separations studies with other devices were reported to the Review Panel. Considering its industrial applications, but limited testing, the Review Panel considers the maturity of the crossflow filtration technology at Stage 4 – Advanced Development, in accordance with DOE 1997b.

5.4.2.2 Completeness of Roadmap

The activities proposed for resolving uncertainties associated with solid-liquid separation include conducting cold and hot tests using a to-be-selected solid-liquid separations technology. The consequences of two reported uncertainties – "Inefficient removal of suspended solids" and "filtered solids cannot be removed/transported" – were rated high. The Review Panel considers this rating reasonable. Three reported development activities – "Select solid-liquid separation technologies for testing", "cold tests" and "hot tests" – are generic and vague. However, the researchers are capable and are expected to provide and execute a detailed plan that should resolve the uncertainties.

5.4.2.3 Adequacy of Roadmap Funding

The proposed funding level ($726K) appears reasonable for selecting a solid-liquid filtration device, executing cold tests and then hot cell tests using actual waste, and developing technical specifications.

5.4.2.4 Adequacy of Roadmap Schedule

The roadmap schedule (69-week duration with completion by April 2004) seems reasonable. However, testing should await characterization of UDS to properly address potential downstream problems associated with variability in UDS compositions and its ratio to separated chemical and radiochemical species.

5.4.2.5 Recommendations

The Review Panel considers the proposed evaluation of other solid-liquid separation devices in addition to crossflow filtration units a good strategy. Deep-bed filtration using glass frit as media may have merit for the acidic, dissolved-calcine solutions. Details to consider for evaluation of crossflow filtration, in addition to those mentioned in Mann and Todd 1998, include (1) evaluating chemical cleaning of plugged filter pores; (2) establishing back-pulsing procedures; (3) evaluating corrosion-resistance of baseline filter media; (4) executing bench-scale testing of CUF technology; and (5) establishing the lifetime of filters exposed to baseline fluids and cleaning fluids.

Because the uncertainties for solid-liquid separation are rated only medium-consequence (they will affect the size of plant but not the viability of the alternative), and because the Review Panel is concerned that the funding or resources will not be available to perform all of the work proposed in the Draft Roadmap, these tasks should be deferred until the

dissolution and separation processes are developed adequately to make Decision 2. See Section 5.4.5 for additional information.

5.4.3 Full Separations

This part of the pretreatment technology is composed of several primary unit operations, including solvent and chemical make-up, TRUEX and SREX process centrifugal solvent extraction, CSIX, mercury precipitation, waste evaporation, acid and water recovery, and off-gas treatment. As currently envisioned, the full separations technologies will treat dissolved calcine using ammonium molybdophosphate-polyacrylonitrile (AMP-PAN) sorbent to remove cesium (CSIX), and will employ the TRUEX process to remove TRU elements and the SREX process to remove strontium. Details and critiques of these technologies can be found elsewhere (PNNL 2000a, Law et al. 1996, Law et al. 1998, Herbst et al. 2000, Law et al. 1999, DOE 1998, Tranter et al. 1999).

5.4.3.1 Technology Maturity

All three of the separations technologies cited above are more mature than the UNEX process separations technology discussed in Section 5.4.4, and the availability of reagents for full separations processing does not appear to be a viability issue. The TRUEX process is the most mature and is considered in Stage 5 – Engineering Development, in accordance with DOE 1997. In addition, the SREX process and the CSIX process using AMP-PAN sorbent are considered in Stage 4 – Advanced Development and ready for full-scale laboratory testing and technical specification development (DOE 1997b). Separation using AMP-PAN sorbent is the least mature of the three, but readily available backup technologies, such as use of crystalline silicotitanate sorbents or the cesium solvent extraction technology under development for alkaline tank waste at SRS, could be considered if needed.

5.4.3.2 Completeness of Roadmap

The activities proposed for resolving uncertainties associated with the Full Separations Alternative include numerous tests and studies to improve the technical basis for processing dissolved calcine using the CSIX, TRUEX, and SREX process. With the exception of the following comments, the Review Panel agrees with the list of uncertainties provided in the Draft Roadmap.

- The rating of the uncertainty “Column channeling control” should be lowered from high-consequence to medium-or low-consequence unless information exists that shows the possibility of a serious problem. This appears to be an engineering-design concern, not an issue of viability.

- The rating of the uncertainty “Spent solvent cannot be treated and disposed (orphan waste)” for both the TRUEX and SREX processes should be lowered from high-consequence to medium-consequence. The Review Panel believes reasonably complete stripping of radionuclides is possible, and solidification and disposal of the relatively small volume of spent solvent onsite or offsite should be feasible.

- Uncertainties related to the strip product from the three processes are rated medium-consequence. The Review Panel believes that these streams should be considered in the context of an integrated system, and since the effects of mixing and further treating these streams are not well-established, these uncertainties should be rated high-consequence. For example, the addition of AMP-PAN alkaline-product solution to the TRUEX hydrogen ethylene diamine pentaacetic acid (HEDPA) strip solution may cause precipitation of the actinides by converting the HEDPA-actinide complexes to insoluble phosphate salts. Heating the HEDPA in an evaporator certainly would cause precipitation. Tasks are needed to evaluate the consequences of process integration and variation in the composition of the streams.

- The Review Panel believes the other full separation technologies (such as LAW evaporation) shown in Figures 3.1 and 3.2 may also be faced with significant uncertainties. These uncertainties cannot be fully identified and rated until an enhanced, integrated flowsheet is developed.

5.4.3.3 Adequacy of Roadmap Funding

The funding level (~$165K) for the proposed workscope seems appropriate based on the experience of Review Panel members who have performed similar work.

5.4.3.4 Adequacy of Roadmap Schedule

The Review Panel believes the schedule for performing the proposed activities (2.5-year duration with completion by December 2004) is aggressive and optimistic. Considering the complexity of issues requiring resolution, the Review Panel is concerned that inadequate funding will severely hinder progress in developing the Full Separations Alternative to the point necessary to support decision-making.

5.4.3.5 Recommendations

Because of the greater maturity of the Full Separations Alternative and the potentially lower complexity and smaller footprint of the UNEX Separation Alternative, the Review Panel recommends that development of the Full Separation Alternative be deferred until the high-consequence uncertainties of the UNEX Separation Alternative are addressed. See Section 5.4.5 for further details.

5.4.4 UNEX Process Separation

This part of the pretreatment technology is composed of a single solvent extraction process (UNEX), waste evaporation, acid and water recovery, and off-gas treatment. The UNEX process separation technology is relatively simple in comparison to the full separations technology. Only one solvent (with four components) is employed using one separation operation, as opposed to one ion-exchange and two solvent-extraction operations in the Full Separations Alternative. Further, only one product stream is produced in the UNEX process. Tests of UNEX process on actual SBW separation showed successful extraction of Cs-137, Sr-90, and actinides. Removal efficiencies of 99.4%, 99.995%, and 99.96%, respectively, using centrifugal contactors operated

in a counter-current mode with recycle, were reported (Law et al. 1999). However, significant amounts of zirconium (87%), lead (98.8%), and molybdenum (32%) were co-extracted. Recent results indicate extraction of these metals can be suppressed to low levels (e.g., 1.6 wt% zirconium, when extracting dissolved aged calcine waste) (Law et al. 2000, Law et al. 2001a, Law et al. 2001b, Herbst 2001). Hot extraction testing with actual dissolved calcine is planned for April 2001. The results are expected to be valuable for detailed roadmap planning.

5.4.4.1 Technical Maturity

The solvent-extraction technology employed in UNEX process separations is relatively new and can be judged as immature because fundamental processing characteristics (including chemical, thermal, and radiolytic stability) have not been completed. Hot tests with dissolved aluminum and zirconium calcines have not been performed, although some are in progress. Therefore, the state of development of UNEX process separation is Stage 3 – Exploratory Development, requiring further laboratory-scale testing, development of functional and performance requirements, and feasibility assessment (DOE 1997b).

5.4.4.2 Completeness of Roadmap

The activities proposed for resolving uncertainties in UNEX process separations include: additional studies of the extraction behavior of minor components and optimizing stripping conditions; and assessments of feed compositional variation, availability of solvent, processing hazards, solvent loss rates, and chemical stability. The Draft Roadmap lists eleven uncertainties, of which five are rated high-consequence and six are rated medium-consequence. The Review Panel agrees with these uncertainties, but disagrees with three of the ratings as follows:

- The rating of the uncertainty "Strip can be treated in the melter" should be increased to high-consequence because of the perceived safety concerns surrounding the high organic concentrations of guanidine carbonate [$(NH_2)_2C{=}NH]_2H_2CO_3$], diethylene triamine pentaacetic acid [$(CH_2CH_2)_2(CH_3CO_2H)_5(NH_2)_3$], and polyethylene glycol-400 [$H(OCH_2CH_2)_nOH$] in the feed to the melter.[7]

- The rating of the uncertainty "Spent solvent cannot be treated and disposed (orphan waste)" should be lowered to medium-consequence as reasonably complete stripping of radionuclides is possible and solidification and disposal of the relatively small volume of spent solvent onsite or offsite should be feasible.

[7] Based on the UNEX process countercurrent demonstration using pilot-plant calcine described in Law et al. 2001b, the UNEX process feed to the melter will have a far greater concentration of organic carbon than metals. This demonstration used dissolved Run #74 pilot-plant calcine, which is considered to be a worst-case zirconium calcine. From this calcine, the UNEX process strip product will contain ~4 g/L of metals, 110 g/L of guanidine carbonate, 10 g/L diethylene triamine pentaacetic acid, and 0.05 g/L of polyethylene glycol-400.

- The rating of the uncertainty "Scrub cannot be grouted into performance grout (citrate)" should be eliminated or modified. Citrate is no longer added to the scrub feed used in the UNEX separations process.

Planned development activities appear to address all of the uncertainties, although the details necessary to judge appropriateness were lacking. As a consequence of discussions with researchers (Herbst and Law, 2001), the Review Panel believes that appropriate detailed plans could be developed. A significant DQO effort is required for identifying and performing the necessary analyses to provide a basis for understanding the extraction behavior of all significant calcine components, and assuring adequate compositions for glass and grout formulations. This process should also be evaluated in the context of an integrated flowsheet to better understand interface issues. This activity was not identified in the Draft Roadmap; the Review Panel believes it should be added.

5.4.4.3 Adequacy of Roadmap Funding

The Review Panel believes the required level of sampling and analysis to support development of UNEX process separations was underestimated. More work should be performed, including three countercurrent extraction demonstrations using three actual dissolved calcines. For this reason, the $1.25M funding proposed for this effort may be $300-500K too low.

5.4.4.4 Adequacy of Roadmap Schedule

The Review Panel believes that the schedule for performing the proposed activities (2.5-year duration with completion by December 2004) is aggressive and optimistic. The Review Panel is concerned that inadequate funding will severely hinder progress in developing UNEX process separation to the point necessary to support decision-making.

5.4.4.5 Recommendations

The Review Panel believes that the UNEX Separation Alternative should offer major advantages over the Full Separations Alternative if no fatal flaws are discovered during development. The Review Panel recommends a focused effort on elevating the maturity of UNEX process separations to that of the full separations process as discussed in the following section.

The Review Panel was disappointed to learn that funding for the UNEX process countercurrent demonstration using actual calcine (planned for April 2001) is not sufficient to perform the analyses necessary to validate the demonstration. The Review Panel strongly recommends that funding be provided to make the demonstration useful for flowsheet development and decision-making. Loss of this opportunity to acquire key data could significantly impact development of the technical basis to support Decision 2. A DQO process should be implemented to establish a basis for cost-effectively planning the demonstration and to assure the highest possible gain.

5.4.5 Overall Pretreatment Recommendations

The Review Panel believes research and development funding for decision-making on separations technologies can best be used by focusing on (1) accelerated development of UNEX process separation and (2) requirements for disposal of LLW produced from separations processes.

5.4.5.1 Accelerated UNEX Process Development

The Review Panel recommends a focused research program for accelerating development of the UNEX process separation technology as a means of supporting and making Decision 2 by September 2003. All pretreatment funding would be directed to optimizing dissolution of calcine (including characterization of UDS) and addressing all high-consequence uncertainties related to the UNEX Separation Alternative. The Review Panel believes 11 to 15 full-time equivalents would be needed to complete the work by September 2003. Five key elements of this recommendation are as follows:

- Optimize conditions for reliable, complete, or nearly complete dissolution of calcine over the entire range of potential compositions. This task also includes collecting sufficient experimental data to predict the amount and composition of UDS.

- Conduct batch distribution studies using simulant solutions to determine the extraction behavior of all important calcine components and reagents employed in the process. Validate understanding of the extraction system initially with batch contact studies using actual dissolved calcine and then with two to three countercurrent demonstrations using selected actual dissolved calcine samples that span the compositional range.

- Establish the commercial availability of solvent components. The Review Panel has concerns about the viability of access to and supply of solvent components currently developed and available only in Russia.

- Develop and assess the means to monitor and control the composition of the solvent during plant operations.

- Conduct scoping studies to assure compatibility of the UNEX process product stream with melter/glass performance. This would require interaction between separations and glass/melter researchers to

    - conduct melting tests using simulants that represent current and enhanced-flowsheet UNEX process product streams;

- evaluate the need for organic destruction and removal and, if found necessary, develop a means to oxidize or destroy organics as a preconditioning step before melting; and

- if necessary, develop alternative UNEX process strip reagents for melter feeds to reduce organic levels and concerns about melter safety and control.

5.4.5.2 Scoping Study to Evaluate Separation Process Options and Waste Acceptance Criteria for Disposal of Separations Process LLW

The development of the UNEX Separations Alternative was based on the premise that an NRC Class A LLW grout would be generated for disposal at INEEL. The State of Idaho wants the grout to be disposed elsewhere. Removal of Sr-90 may not be required for disposal at Hanford (McGinnis 2001.). The Hanford Waste Acceptance Criteria for Cs-137 loading in LLW is also less constraining than that defined by the NRC for Class A LLW. Other candidate disposal sites have or will have different waste acceptance criteria that may be more amenable to the properties of grouted UNEX process secondary waste.

One change that could simplify the flowsheet for the UNEX Separations Alternative (and Full Separations Alternative) is to produce a lower-quality Class C LLW grout instead of a Class A LLW grout by eliminating strontium separation and decreasing the requirements for removing Cs-137. This would eliminate the polyethylene glycol component of the UNEX process solvent, result in a more robust process, and produce a lower volume of feed to the melter with a significantly reduced organic loading. For the Full Separations Alternative, one of the complexities of the flowsheet would be eliminated, and a reduction of the requirements for removing Cs-137 would also act to increase the viability of the processes and decrease volumes of waste feed to the melter.

The Review Team recommends a thorough review of the requirements for disposal of LLW and evaluation of options for simplifying the separations processes. The coupling of these activities would permit a more thorough assessment to support Decision 3.

5.5 Vitrification

This technology area is composed of three parts: off-gas treatment; vitrification of the separated HLW liquid fraction; and direct vitrification of calcine. The overall system is composed of HLW feed systems, glass melters and off-gas processing equipment (which includes a “noxidizer” for abatement of nitrogen oxide), a scrubber, tanks, filters, mercury sorber, and ion exchanger for removing cesium and strontium.

5.5.1 Technology Maturity

A substantial technical basis exists for vitrifying INEEL calcine waste streams. This basis includes the successful operating histories of several HLW glass processing plants around the world (Schulz 1998). On inspection of the evolution of the technology and design basis for these plants, it is clear that the processing features, unit operations, and melter systems have been selected to optimize the processing capability and glass quality for the specific waste feed

materials that must be processed. While some plants are configured to accommodate some variability in waste feed characteristics, others are highly tuned to a uniform type of feed. The better the information on feed characteristics during development and design, the higher the certainty that the process technologies and features selected will yield efficient and safe operations. Recognizing the above considerations, a reasonable basis exists for confidence that vitrification of the HLW calcine can be accomplished by employing the technologies or adaptations of the technologies that have been successfully demonstrated in other HLW applications.

The economics of HLW processing and disposal are strongly dependent on the achievable waste loading in the glass. Estimates of the waste loadings and the efficiency of separations processes are expected to be dominant factors in the decision to select among the two Separations Alternatives and the Direct Vitrification Alternative. Therefore, it is critically important that waste loading estimates developed and used at each major decision point have the best possible technical basis. Achieving these "best-basis" estimates will require an integrated effort that brings together several factors, including the best available calcine waste characterization data, calcine retrieval and staging planning, and flowsheet calculations of separate and combined-feed stream compositions and associated glass quality. This integrated effort also requires defined waste compositional envelopes that are compatible with safe and acceptable operation of the melter, as well as with each of the other unit operations in the overall processing system. Coordination and proper sequencing of the work to achieve these "best-basis" estimates is critical to making sound decisions. The Draft Roadmap activities that are most critical to upgrading the basis for waste loading in the HLW glass should be managed using a separate logic/timeline diagram as a tool to assure that upgraded data are available at the required times to support decision-making.

The Draft Roadmap did not identify activities directed to selecting a specific glass melter technology and related features until after Decision Point 3, which indicates that this work is not needed for decision-making. The Review Panel believes this is reasonable if the focus of the Draft Roadmap is on establishing the viability of the calcine treatment alternatives and related economic bases. From the work performed to date on direct vitrification of calcine, it appears that using features different from those of the typical melters employed at the DWPF and WVDP would not likely enhance waste loadings under the current glass-quality standards for Repository disposal. This perception could change if further characterization shows the presence of significant volumes of calcine with compositions different from those assumed in glass formulation studies to date. If the aluminum and zirconium calcines are not blended, the use of a high-temperature melter may have a significant impact on minimizing glass volume, however. The discovery of significant volumes of calcine with unexpected compositions could be a catalyst to evaluate different melter technologies (e.g., bottom drains and cold-wall crucible melters). Encountering higher-than-expected levels of noble metals or feed materials known to cause corrosion of melters also could be a driver for different technologies. The unique characteristics of HLW feeds produced by the separations processes also may require specific melter capabilities or innovative features to establish the viability of vitrifying those feeds.

The interface of planning for vitrification of calcine waste and selecting/designing technology for the SBW vitrification plant has not been explicitly included in the Draft Roadmap vitrification

activities. The baseline at INEEL has recently changed to emphasize conceptual design of an SBW vitrification plant. INEEL personnel recognize that an SBW vitrification plant should be made adaptable to processing calcine after completing the SBW mission. The challenge to provide adaptability differs among the three calcine processing alternatives. The Draft Roadmap does not identify studies or tests that would assist in selecting technologies for the SBW treatment plant that would be most compatible with future calcine processing.

Factors that should be considered include differences in requirements for liquid and dry melter feed systems, and process and quality control systems. Strategies for qualifying the vitrified HLW form for disposal should be addressed early in the process of defining unit operations and selecting equipment. Establishing an approach that satisfies waste form requirements for two different streams processed through the same plant will be a significant challenge. This lack of apparent linkage between the Draft Roadmap and the SBW treatment technology and conceptual design should be addressed. The Review Panel recommends that a series of workshops in which conceptual design requirements and technology choices under consideration for the SBW plant be assessed with regard to their implications for calcine processing. Revisions to both the SBW and calcine technology roadmaps may be needed as a result.

5.5.1.1 Maturity of the Off-Gas System

The off-gas system must effectively reduce the concentrations of radionuclides and certain chemicals released as gases from the melter to levels that meet al.l regulatory requirements. Reductions of several orders of magnitude may be required in certain cases. The flowsheets for each alternative have not yet been developed to the necessary level of detail to determine the level of reduction required to meet potential stack discharge limits, however.

The technical approach to melter off-gas treatment depicted in Figures 3.1, 3.2, and 3.3 appears to be fundamentally sound. Radionuclides would be removed by quencher/scrubber systems, ion-exchange systems, and high-efficiency particulate air (HEPA) filters. Aqueous steams containing radionuclides would be recycled to the melter feed system. Mercury would be removed in an adsorption bed. Nitrogen oxides would be removed by a combustion/oxidation/reduction system called a "noxidizer." Although little detail was provided on these unit operations, several have been successfully operated in conjunction with large radioactive melters at the DWPF and WVDP. The noxidizer system, and removal of mercury, cesium and strontium have not been demonstrated in HLW plants on such a large scale. However, the Review Panel has a high degree of confidence that the off-gas treatment processes will be successful, but demonstration in an integrated pilot-plant facility is needed.

Key factors that should be considered during integrated flowsheet development, pilot-plant design and operation, and final facility design are as follows:

- The concentrations of Cs-137 and other radionuclides in the melter feed will vary among the three alternatives as a function of the effectiveness of the separations and dissolution processes. Cesium has a relatively high volatility at melter operating

temperatures, which will affect the design of off-gas treatment components and the quantity of Cs-137 in the recycle stream to the melter. The rate of HEPA filter loading can also be impacted. Studies of the impact of chemical and radiochemical variability on the design and operation of the off-gas system for each alternative should be conducted. These studies should span the full range of potential melter operating temperatures.

- Although the INEEL calcine contains significant amounts of mercury, the flowsheets did not provide actual values. The Review Panel was informed that the quantity of mercury to be fed to the melter would vary among alternatives. Detailed flowsheets should be developed that show mercury concentrations throughout the processing systems. Any mercury that is fed to the melter will be discharged as a vapor to the off-gas system because the high temperature of the melter is sufficient to volatilize all chemical species of mercury. Mercury can form compounds that, if accumulated in the off-gas system, will cause severe corrosion. Mercury can also form explosive compounds under some conditions. Experimental data will be required to determine if such compounds can form under plausible operating conditions, especially those for the Direct Vitrification Alternative, which presently does not include a mercury removal step prior to vitrification. Further, mercury is a hazardous material that must be removed from all aqueous and air discharge streams to levels that meet regulatory requirements. Adsorbents and other secondary waste streams that remove or become contaminated with mercury may be classified as hazardous wastes. Flowsheet studies and experimental work will be required to establish waste classifications for each liquid and solid waste generated in the off-gas systems.

- High concentrations of organic materials would be fed to the melter from the the UNEX process. If near-complete combustion of the organics is not obtained in the melter plenum, combustible materials will likely be discharged to the off-gas system. This may invoke requirements for Safety Class or Safety Significant equipment and controls. Such safety classifications usually result in significant increases in both capital and operating costs. This issue should be addressed early by developing enhanced flowsheets and conducting appropriate experimental work to provide the basis for assessing risk.

- Flowsheets that specifically address the potential range of variability in concentrations of all key off-gas components (e.g., mercury, Cs-137, halides, nitrogen oxides, and combustibles) should be developed for each alternative. Experimental work should focus on identifying potentially significant impacts to the design of the off-gas systems (e.g., the combustion of organics in the off-gas stream, and excessive particulate entrainment to the off-gas system due to dry feeding of finely ground calcines to the melter).

5.5.1.2 Maturity of Vitrification of Separated HLW Fractions

Several issues may adversely impact the vitrification of feed streams generated by the Separations Alternatives. The primary issue of concern, which is most pronounced in the UNEX Separation Alternative, is the effect of high concentration of organics in the melter feed streams. The impacts of organics on the vitrification process are complex and depend on the specific organic species in the feed stream. The melter design and method of introducing the feed can influence the fate of the organics in the melting process. In general, the organic species may (1) volatilize or react in the melter plenum space and quickly enter the off-gas system; (2) remain with the primary feed components and enter into decomposition and redox reactions that occur as the feed heats up and starts to melt; and (3) be enveloped by molten glass and affect the redox state of the molten glass pool. Redox control is a critical aspect of waste vitrification and, if not adequately controlled, can adversely impact the viability of the process. The introduction of organics into a high-temperature environment can also engender serious safety issues if the fraction that enters the off-gas system exists at combustible concentrations. Specific implications for the Full Separations and UNEX Separations Alternatives are discussed in Section 5.5.2.

Another important issue for consideration is the need for complete definition of the compositions and characteristics of the melter feed streams generated by both Separations Alternatives. The quality of such definition will depend on the developmental status of the process flowsheets and the level of understanding of the characteristics of the specific unit operations that contribute waste to the vitrification feed streams. At this time, only a general definition of the expected major components of the feed streams exists, and few data on minor components are available. For example, only limited data on the compositions of UDS have been generated. The UDS stream is a significant component of the overall melter feed stream. Because the compositions of the melter feed streams are the bases for formulating acceptable glasses and defining the waste loading, the credibility of the waste-loading estimates depends strongly on the accuracy of the projected waste stream compositions and their variabilities. A closely linked, iterative activity to update glass formulations and waste loadings, and improve the supporting flowsheet data, is needed. The range of uncertainty in waste loadings should be defined based on both the uncertainty in the flowsheet compositions and the uncertainty associated with available glass-formulation and process-behavior data.

Another dimension of the feed compositional issue would arise with any change to the baseline flowsheets and retrieval logistics. The SBW tank heels are shown as undergoing dissolution and entering the head end of the separations processes with the dissolved calcine in the flowsheets provided as Figures 3.1 and 3.2. This assumption simplifies the estimate of the melter feed composition. However, there is also considerable uncertainty in the composition of the tank heels. If the tank heels are resistant to dissolution and their undissolved residues become a direct component of the vitrification feed, the undissolved residues of the tank heels may have an important influence on waste loading and process performance.

Most of the limited studies on the technical feasibility of vitrifying waste streams from separation processes to date have focused on glass formulation issues associated with the Full Separations Alternative. These studies have used projected waste stream compositions based on limited analytical data. This waste stream would include derivatives of the CSIX medium, AMP-PAN, which has relatively high concentrations of molybdenum and phosphorus, and an actinide-strip stream that contains relatively high concentrations of phosphorus. The solubilities of molybdenum and phosphorus are limited in borosilicate glasses. These chemicals appear to be the primary components on which the waste loading limits for glasses from the Full Separations Alternative were based. Glass formulations that yielded waste loadings of about 9 wt% (due to molybdenum and phosphate limits) for these glasses have been tested (Peeler 1999). Only laboratory testing has been performed; no melter testing of any scale with these compositions has been conducted. Surrogate wastes for melter testing have not yet been developed. A significant open issue is the total organics content of this waste stream and its impact on melter safety and efficiency.

Few evaluations of vitrification issues associated with the UNEX process have been performed. It appears that the composition of the UNEX process waste stream that would be fed to the melter has not been directly assessed. This stream would not contain molybdenum and phosphorus, which affect processing conditions and waste loading in the Full Separations Alternative, but it would contain substantial concentrations of organics (Section 5.4.4) that have not been evaluated. Specifically, the UNEX process strip solution contains guanidine carbonate and diethylene triamine pentaacetic acid. There is significant uncertainty on how these, and other organics in the UNEX process waste stream, will behave in the melter and off-gas system. Until development work is performed on suitable glass formulations and the melting/off-gas behaviors of melter feeds containing these constituents are determined in melter tests, the uncertainty in waste loading for glasses produced from UNEX process wastes will be high. INEEL staff stated that Russian investigators have made some glass from a UNEX process separations feed batch containing guanidine carbonate, but the relevance of this work to processability concerns is not known. At present, it appears that waste loading projections for UNEX process glasses have no objective basis. Eventually, it may be shown that the waste loading is constrained by organic-based safety limits that are below levels that would otherwise be allowed by constituent solubilities in glass and melter processability limits.

The inherent driver for separations processing is the potential to reduce cost by reducing the total volume of HLW glass for Repository disposal. One effect of reduced glass volumes is a proportional increase in radionuclide concentrations in the glass relative to that produced by direct vitrification. The significantly higher concentrations of radionuclides per unit volume of glass product projected for the Separations Alternatives raises concern about the elevated radiation dose and heat loads of individual canisters of glass. Concern is highest in the case of the UNEX Separation Alternative, for which the projected glass volumes are the lowest. The heat loads (e.g., the total heat limit per canister of glass and the temperature limit at the center line of a glass canister) in glasses

produced from separations process waste must be compared to current Repository waste acceptance requirements. This comparison should be made before Decision 1, and the results reflected in the flowsheets and LCC estimates.

The issue of using the melter as an incinerator may be raised if the combustible gas concentration in the melter plenum is sufficiently high to burn with a flame. While the high temperatures used in the melting process should tend to destroy organics, existing HLW melter designs are not optimized for this function. Further study of potential safety and permitting issues is needed based on better estimates of melter feed compositions from the separations process flowsheets. The laboratory and melter testing work currently defined in the Draft Roadmap should be performed to obtain the data needed to make valid assessments of the issues described above and to support decision-making.

The Review Panel considers vitrification of separations process wastes to be at the Applied Research - Stage 2, requiring further directed research and proof of principle demonstrations (DOE 1997b). Further laboratory work on the effects of organics and strip reagents on glass melting behavior is needed before small-scale melter testing is conducted. Successful melter testing would elevate the level of maturity of the technology to the Exploratory Development - Stage 3 category. Given the relative technical immaturity of this application of vitrification technology, a strong possibility exists that the glass volume estimates derived from the current separations flowsheets are unrealistically low. Factors that may result in higher glass volume projections include the Repository limits on canister heat and temperature, and safety limits that preclude the formation of flammable gas concentrations.

5.5.1.3 Maturity of Direct Vitrification

A modest effort to develop vitrification of retrieved calcine has been under way at INEEL for several years. This effort has included Compositional Variability Studies (CVS) to define a range of glass compositions that accommodates the projected aluminum, zirconium, and fluoride contents of nominal calcine feeds (Vienna 1999). These studies have shown that production of homogeneous waste glasses with loadings of about 40 to 55% may be achievable. The potential for further refinements in the waste loading basis will depend on improvements in the waste characterization database and in the projected concentrations of batches of blended calcines. The Review Panel recommends that planning for characterization and batch blending include input from experienced vitrification experts.

Several process tests have been conducted using small, pilot-scale melters. The most significant tests were performed using the EV-16 melter at Clemson University (Musick 2000). Calcine surrogates and glass formers in a dry melter feed arrangement were used successfully in these tests, with acceptable melting rates and glass pouring properties observed. The tests also showed that the method of preparing the calcine surrogate could significantly influence melting performance. The development of surrogates should be clearly articulated in roadmap planning.

The Review Panel considers the level of technical maturity of direct vitrification of dry calcine to be at the Exploratory Development - Stage 3, requiring laboratory-scale testing and definition of functional and performance requirements to establish feasibility for the application (DOE 1997b). The work performed to date to define compositional ranges for viable glass formulations, and the initial success of small-scale melter tests, are consistent with this level of maturity. However, additional work at this level will be needed to resolve issues on preparing melter feeds containing a combination of calcine and tank heels. The manner in which tank heels are handled (i.e., as separate feed streams, as uniformly blended streams, or as intermittently blended streams) could significantly affect processing performance.

5.5.2 Completeness of Roadmap

An extensive list of activities was proposed for resolving uncertainties associated with direct vitrification of calcine, including: installation and evaluation of blending equipment; evaluation of the composition and methods for vitrifying heel waste; safety analyses; development of flowsheets for blended products; definition of waste form requirements; devising methods to sample and characterize feed; conducting remote-scale and pilot melter tests; and developing the melter-feed and off-gas treatment systems. The activities identified appear to be valid, but are inconsistent with the few shown for vitrification in the Separations Alternatives. A considerably longer list of uncertainties (and, hence, more proposed activities) was provided for the Direct Vitrification Alternative than for the two Separations Alternatives, even though the Direct Vitrification Alternative has the strongest base of development work. The difference in the extent of listed uncertainties for separation processes may reflect the absence of “discovery” that has occurred during the development of the more mature direct vitrification process. Work should be planned to resolve similar uncertainties associated with the Separations Alternatives.

In proposed tasks under the Draft Roadmap's "Unconstrained-As Early As Possible" case, no specific activities and durations are identified for the Direct Vitrification Alternative. However, in the "Constrained-As Late As Possible" case, the extensive set of activities describe above is identified, most of which support conceptual design after Decision 3, but some of which are scheduled in the period before 2005. It is not clear which of these activities are considered relevant to Decision 3. Revisions to the Draft Roadmap are needed to clarify which activities in the Direct Vitrification Alternative are required to support the decision process.

The potential impacts of organics in the vitrification feeds from the Separations Alternatives are properly identified as a high-consequence uncertainty. Further definition of the specific technical challenges that organics impose on vitrification systems is needed. Examples include defining the impact on melting rate, potential for reduction of metals and foaming, impact on redox control of the glass, potential for flammability in the melter, and potential source or cause of compounds that may deposit in the off-gas system. Special glass formulations that can accommodate these conditions may be needed. The Review Panel believes that laboratory testing of the effects of separations process wastes on melting behavior and redox control is critical to decision-making. Further definition of laboratory testing activities is needed to ensure that these activities will effectively address the processing implications of organics in these feed streams. Definition includes providing further breakdown of processability tests and schedules,

addressing how melting behaviors will be evaluated, and describing how melter volatility and redox control will be tested.

5.5.3 Adequacy of Roadmap Funding

Approximately $40M of work is proposed for developing the direct vitrification technology, but only about $2M of work is proposed for developing vitrification of both the separations process waste streams. Activities that address vitrification of the process waste streams consist of laboratory glass testing and research-scale melter tests. The proposed budgets for these activities are judged to be insufficient to perform the work needed to resolve high-consequence uncertainties. Although BBWI personnel indicated that cost estimates for conducting melter tests with separations process waste were based on recent experience with a test involving direct vitrification of calcine, the Review Panel believes that more diagnostic and analytical work will be needed. This work, which includes more detailed analyses of off-gas compositions and chemical species, must be tailored to address the significant separations feed issues previously discussed. Likewise, the proposed laboratory testing of melting behaviors of separations process feeds should be supported with more sophisticated characterization of chemical species and analyses of the off-gases than is usually employed in glass formulation and exploratory melting studies.

It is unclear where and how the separations process waste surrogates (including undissolved solids) for the vitrification tests would be developed and prepared. A working interface among those developing the flowsheets, and those planning characterization, separations testing, and melter testing activities is important to resolving surrogate definition and reliability issues, and other integration concerns. The Review Panel believes an integration function should be included in the Draft Roadmap.

Surrogate development and preparation is also important to any further melting tests performed on direct calcine. A distinct activity covering surrogate development should be incorporated into the planning sequence associated with melter testing scheduled for 2004. The development of surrogates should be based on consideration of how tank heels would be blended with calcine, and the issue of whether dissolved or dry calcine would be fed to the melter.

5.5.4 Adequacy of Roadmap Schedule

Vitrification testing using feeds from the Separations Alternatives is scheduled to begin in late 2003 and continue through 2004. This timeframe provides information before that needed for Decision 3, but allows little margin for addressing any significant unexpected discoveries resulting from the testing. The schedules, which appear to be realistic, do not support Decision 3 because they directly overlap testing schedules for the Separations Alternatives. Thus, refinements in the compositions of the melter feeds that result from separations process testing will not be available in time to support vitrification testing. A logical schedule would show related melter testing continuing after completing the Separations Alternatives testing.

If the schedule can be accelerated for selecting a single Separations Alternative for further development, as recommended in Section 5.4.5, then some schedule acceleration of the

vitrification tests may also be possible. In this case, vitrification testing activities for the UNEX Separation Alternative should be given priority due to the greater uncertainty of the feasibility of vitrifying UNEX process waste. The vitrification testing outlined in the Draft Roadmap is currently scheduled to begin in early 2003. These vitrification testing activities would need to be accelerated by about 16 months in order to provide data on the feasibility of vitrifying separations process wastes in support of Decision 2.

In the activity schedules shown in the Draft Roadmap, minimal linkage among the activities in the different major areas of investigation is evident. The development of a top-level activity schedule logic that links the related technology areas would provide a number of benefits, including making visible the point in time when various activities would yield new data that would influence work in other related activities. An enhanced logic-based schedule would enable definition of the points in time when updates to vitrification feed compositions would be available to support planning of vitrification tests.

5.5.5 Recommendations

The Review Panel believes that enhancement of the flowsheets (including flowsheet uncertainties) and logic-based integration of vitrification development activities with activities in the other treatment areas – especially characterization and separations – are critical to the overall success of the technology development effort. Other recommendations include:

- Plan to evaluate the implications of a combination of mercury, organics, and halides (especially fluorine) in off-gas streams and condensates. This activity would be used to evaluate corrosion and candidate materials for off-gas system components.

- Evaluate the radionuclide content of glasses produced from separations process wastes and compare associated heat loads, dose rates, and centerline temperatures in the glass-product canisters to Repository limits.

- Develop a list of technical issues on organics in melter feed streams (especially for the feeds that would be generated in the UNEX Separations Alternative. Redefine CVS laboratory activities and accelerate separate-effects testing of the impacts of organics on melting and off-gas behavior.

- Seek information on the Russian vitrification experiments using UNEX process waste. Replan the melting feasibility testing to include an adequate series of separate-effects laboratory tests (such as Differential Thermal Analysis, Thermogravimetric Analysis, thermal gradient tests, and quartz-tube tests), and an expanded series of research-scale melter tests. Plan for detailed analysis of the off-gas chemistry and compositions.

- Establish a plan for defining increasingly realistic ranges in calcine feed compositions based on characterization data, process history, and postulated retrieval sequences and batches. Use the results as a basis for developing flowsheets and surrogate wastes for vitrification testing.

- Resolve the impacts of crystallization on glass durability and waste loading at an early stage of developing the alternatives.

5.6 Secondary Waste Treatment and Disposal

This technology area is composed of two primary unit operations: treatment of secondary wastes (typically by grouting) and disposal of treated and untreated LLW at sites licensed to accept the characteristics of the wastes.

5.6.1 Technology Maturity

Grouting and other secondary waste treatment technologies are widely used, although some failed applications have been reported within the DOE complex. Separations Alternatives are expected to produce less vitrified waste than the Direct Vitrification Alternative but significantly more secondary waste. Disposal of secondary waste is much less expensive than disposal of vitrified waste on a unit-volume basis. However, the classification of secondary waste for disposal is a key variable of the unit cost for disposal. Possible waste classifications include low-level, mixed, remote-handled TRU, contact-handled TRU, and hazardous wastes. Hazardous wastes may be further classified as “listed,” “unlisted,” or some other category depending on the state in which the waste are to be disposed. The composition of the waste must be fully and accurately determined so that the proper treatment is selected and the correct classification is assigned. These factors play a role in determining whether the waste acceptance criteria of potential waste disposal sites can be met and in estimating overall volumes of the various secondary wastes and associated disposal costs. The cost of disposing secondary wastes may be a significant component of the LCC of each alternative.

Political issues resulting from plans to send large quantities of secondary waste from one state to another must be expected and resolved. The State of Idaho has indicated that it wants to transport all secondary waste out of Idaho for disposal elsewhere. Since waste classification is primarily a function of the concentrations of the radioactive and hazardous materials of concern, the processes that generate secondary waste streams requiring treatment and/or disposal must be carefully evaluated to ensure they are capable of consistently producing wastes that can be successfully treated within the limits of the designated waste classification. Flowsheet variability studies on all components that may affect waste classification and quantities of secondary waste produced should be conducted. Efforts to obtain firm commitments from disposal site operators to accept all suitably treated secondary waste should be undertaken as soon as sufficient data are available. Appropriate reviews should be initiated with all potentially impacted federal and state regulatory agencies as soon as preliminary data that relate to the above issues are available.

5.6.2 Completeness of Roadmap

The activities proposed for resolving uncertainties associated with secondary waste treatment include evaluations of safety and the need for denitration of secondary wastes produced in the

separations processes. Flowsheet enhancements; grouting tests; and evaluations of approaches for disposal of ion exchange media, granular activated carbon, HEPA filters, sulfate slag layers, and high efficiency mist eliminators are proposed for the direct vitrification process. The Draft Roadmap has identified a comprehensive set of uncertainties for secondary wastes. Several general issues associated with secondary waste treatment and disposal apply to all three of the alternatives; however, the specific approaches that should be taken for addressing the issues differ considerably among the alternatives. General issues in common to the alternatives include mercury disposition, definition of secondary waste compositions and volumes, and definition of the capability to comply with the disposal waste acceptance criteria.

As is the case for vitrification processing, the proposed activities for dealing with uncertainties are favor the Direct Vitrification Alternative, which is considerably more advanced in its development than either Separations Alternative. The further development of the flowsheets for the Separations Alternatives may result in identifying the need for significant modifications to the off-gas processing systems. These off-gas systems are currently represented in Figures 3.1 and 3.2 as single generic unit operations. Future modifications may have significant ramifications to the secondary waste treatment systems implied in the Draft Roadmap. It is not clear how further refinements to the flowsheets will be related to analyses intended to address secondary waste uncertainties. A useful enhancement to this part of the Draft Roadmap would be to clearly discriminate those activities that bear primarily on the viability of the processes versus those aimed primarily at demonstrating compliance with waste acceptance requirements for candidate disposal sites, and those that address waste volume and other factors not directly related to the viability of disposal.

5.6.3 Adequacy of Roadmap Funding

The funding picture presented for secondary waste activities was reasonably clear for the Separations Alternatives, but somewhat confusing for the Direct Vitrification Alternative. Costs identified with studies (evaporation/denitration) to address issues in the separations streams appear reasonable to support decision making, although significant costs likely will be incurred to support design. These design cost elements are not indicated for the Separations Alternatives.

The costs of secondary waste activities identified for the Direct Vitrification Alternative are associated exclusively with the design phase. Work to resolve certain secondary waste issues should be funded to support flowsheet development, specifically those activities associated with defining the balance of radionuclides between the off-gas scrubber blow-down and the melter in all three alternatives. This information is needed as a basis for improved secondary waste volume estimates and analysis of compliance with waste acceptance criteria.

Activities that address mercury disposition were represented only in the cost estimates for the design phase of the Direct Vitrification Alternative. Some investigation (and funding) will be required for addressing mercury disposal in all three alternatives to support decision making.

5.6.4 Adequacy of Roadmap Schedule

The schedules for secondary waste activities warrant further development to support decision making because the related issues are shown as being resolved in a single day in late 2004. Flowsheet enhancements activities for secondary waste processing should be scheduled, as should activities that address mercury disposal for all three alternatives.

5.6.5 Recommendations

- Develop flowsheets that include adequate definition of secondary waste streams for each of the alternatives, including estimated uncertainty ranges and volumes of treated secondary waste. Iterate until the flowsheets and uncertainties in waste composition appear consistent with the waste acceptance criteria at candidate disposal sites.

- Continue interactions with disposal site operators and responsible federal and state agencies to ensure currency with evolving regulations and commitments to accept compliant secondary wastes for disposal.

.

- Consider near-term scoping tests on secondary wastes that may be difficult to grout (e.g., those containing relatively high concentrations of dissolved organics). Such testing may identify the need for additional unit operations to ensure process viability.

6.0 Other Considerations

The Review Panel fully supports the current INEEL plan to design the SBW treatment facility to accommodate subsequent vitrification of calcine. The need to consider the three alternatives in the design complicates this objective because each alternative poses different challenges in assuring cost-effective equipment interfaces between the SBW and calcine treatment processes.

For example, the SBW melter will be fed aqueous waste and the calcine melter may be fed dry waste. The equipment required to prepare aqueous and dry feeds and to transfer the feeds to the melter varies significantly in type, space, and height requirements. The types, volumes, and treatment requirements of secondary wastes generated by the three alternatives and the SBW process will also vary significantly. The significant complexity of the separations processes will also require more space than will be necessary for preparing SBW melter feeds.

The SBW treatment facility designers will be faced with the challenge of whether to plan for expansion of the SBW facility by building connected annexes or by building new facilities with connecting pipelines. This is a decision that may significantly impact the LCC of treating both SBW and calcine. Factors such as shielding, design basis events, inventories of TRU and other key radionuclides in the facilities, and the associated seismic requirements may have large cost impacts. The input of nuclear safety personnel should be sought on these and other safety factors in planning SBW and calcine treatment integration, and the cost impacts should be reflected in Decision 1, if possible.

Section 7.0 References and Bibliography

Chamberlain DB, RA Leonard, JC Hoh, EC Gay, DG Kalina, and GF Vandegrift. 1990. *TRUEX Hot Demonstration: Final Report*. ANL-89/37, Argonne National Laboratory, Brookhaven, New York.

52 FR 31508. August 20, 1987. U.S. Department of Energy, Office of Civilian Radioactive Waste Management, *Civilian Radioactive Waste Management; Calculating Nuclear Waste Fund Disposal Fees for the Department of Energy Defense Program Waste*. Federal Register.

INEEL 2001a. "Idaho HLW DEIS Cost Date Overview." Presented to the TFA Calcine Roadmap Review Panel, February 22, 2001. Idaho Falls, Idaho.

INEEL 2001b. "Block Flow Diagrams." Presented to the TFA Calcine Roadmap Review Panel, February 21, 2001. Idaho Falls, Idaho.

Herbst RS, JD Law, TA Todd, DJ Wood, TG Garn, and EL Wade. 2000. *Integrated AMP-PAN, TRUEX, and SREX Flowsheet Test to Remove Cesium, Surrogate Actinide Elements, and Strontium from INEEL Tank Waste Using Sorbent Columns and Centrifugal Contactors*. INEEL/EXT-2000-00001, Idaho National Engineering and Environmental Laboratory, Idaho Falls, Idaho.

Herbst RS and JD Law, 2001. Personal communication, February 22, 2001. Idaho Falls, Idaho.

Law JD, KN Brewer, RS Herbst, and TA Todd. 1996. *Demonstration of the TRUEX Process for Partitioning of Actinides from Actual ICPP Tank Waste Using Cetrifugal Contactors in a Shielded Cell Facility*. INEL-96/0353, Idaho National Engineering and Environmental Laboratory, Idaho Falls, Idaho.

Law JD, KN Brewer, RS Herbst, and TA Todd. 1998. *Demonstration of an Optimized TRUEX Flowsheet for Partitioning of Actinides from Actual ICPP Sodium Bearing Waste Using Centrifugal Contactors in a Shielded Cell Facility*. INEEL/EXT-98-00004, Idaho National Engineering and Environmental Laboratory, Idaho Falls, Idaho.

Law JD, DJ Wood, and TA Todd. 1999. *Development of a SREX Flowsheet for the Separation of Strontium from Dissolved INEEL Zirconium Calcine*. INEEL/EXT-99-00001, Idaho National Engineering and Environmental Laboratory, Idaho Falls, Idaho.

Law JD, RS Herbst, VN Romanovskiy, VG Khlopin, and MV Logonov. 2000a. *Demonstration of the UNEX Process for the Simultaneous Separation of Cesium, Strontium, and the Actinides from Actual lNEEL Tank Waste*. INEEL/EXT-99-00954, Idaho National Engineering and Environmental Laboratory, Idaho Falls, Idaho.

Law JD, RS Herbst, TA Todd, VN Romanovskiy, VM Esimantovskiy, IV Smirnov, VA Babain, BN Zaitsev, and SB Podoynitsyn. 2000b. *Extended Flowsheet Testing of the UNEX Process for the Simultaneous Separation of Cesium, Strontium, and the Actinides from Simulated INEEL*

Tank Waste." INEEL/EXT-2000-01328, Idaho National Engineering and Environmental Laboratory, Idaho Falls, Idaho.

Law JD, RS Herbst, TA Todd, VN Romanovskiy, VM Esimantovskiy, IV Smirnov, VA Babain, and BN Zaitsev. 2001a. "The Universal Solvent Extraction (UNEX) Process II: Flowsheet Demonstration of a Novel Solvent Extraction Process for the Separation of Cesium, Strontium, and Actinides from Acidic Radioactive Waste." *Solvent Extraction and Ion Exchange,*19(1).

Law JD, R.S. Herbst, TA Todd, DR Peterman, VN Romanovskiy, VM Esimantovskiy, IV Smirnov, VA Babain, and BN Zaitsev. 2001b. *Flowsheet Testing of the Universal Solvent Extraction Process for the Simultaneous Separation of Cesium, Strontium, and the Actinides from Dissolved INEEL Calcine.* Presented at Waste Management 01, Tucson, Arizona. February 2001.

Mann NR and TA Todd. 1998. *Evaluation and Testing of the Cells Unit Crossflow Filter on INEEL Dissolved Calcine Slurries*. INEEL/EXT-98-00749, Idaho National Engineering and Environmental Laboratory, Idaho Falls, Idaho.

McGinnis, CP. 2001. Personal communication, February 22, 2001. Idaho Falls, Idaho.

Murphy JA, WJ Melton, AL Olson, and AZ Rogers. 2000. *Draft Calcine Treatment Technology Development Roadmap*. INEEL/EXT-2000-01620, Idaho National Engineering and Environmental Laboratory, Idaho Falls, Idaho.

National Academy of Science (NAS) 2000. *Alternative High-Level Waste Treatments at the Idaho National Engineering and Environmental Laboratory*. National Research Council, National Academy Press. Washington, D.C.

Olson AL 2001. *Calcine Treatment Roadmap*. Presentation to the TFA Calcine Review Panel, February 21, 2001. Idaho Falls, Idaho.

PNNL 2000a. *Assessment of Selected Technologies for the Treatment of Idaho Tank Waste and Calcine*. PNNL-13268, August 2000. Prepared for the Tanks Focus Area by Pacific Northwest National Laboratory, Richland, Washington.

PNNL 2000b. Letter Report: *Technical Review of the Applicability of the Studsvik, Inc., THOR (SM) Process to INEEL SBW*. PNNL-13455, September 2000. Prepared for the Tanks Focus Area by Pacific Northwest National Laboratory, Richland, Washington.

PNNL 2000c. Letter Report: *Assessment of Idaho Technology Roadmap for Direct Vitrification Treatment of Sodium-Bearing Waste*. September 2000. Prepared for the Tanks Focus Area by Pacific Northwest National Laboratory, Richland, Washington.

Romanovskiy, VN, VM Esimantovskiy, IV Smirnov, VA Babain, TA Todd, JD Law, and RS Herbst. 2001 "The Universal Solvent Extraction (UNEX) Process I: Development of the Universal Extraction Process Solvent for the Simultaneous Separation of Cesium, Strontium, and

Actinides from Highly Acidic Radioactive Waste," *Solvent Extraction and Ion Exchange*, Vol. 19, no. 1, (2001).

Schulz, WW, and NJ Lombardo, 1998. *Science and Technology for Disposal of Radioactive Tank Waste*. ISBN 6 306-45904-3, Plenum Press, New York and London.

Tranter TJ, RS Herbst, TA Todd, and HB Eldredge, 1999. *Evaluation and Testing of Ammonium Molybdophophate-Polyacrylonitrile (AMP-PAN) as a Cesium Selective Sorbent for the Removal of Cs-137 from Idaho Nuclear Engineering and Technology Center Acidic Waste*. INEEL/EXT-99-00645, Idaho National Engineering and Environmental Laboratory, Idaho Falls, Idaho.

Tripp JL and EL Wade, 1997. *FY-97 Experimental Results of the Cells Unit Crossflow Filter Tests at the INEEL*. INEEL/EXT-97-01232, Idaho National Engineering and Environmental Laboratory, Idaho Falls, Idaho.

U.S. Department of Energy (DOE). 1995. *Analysis of the Total System Life Cycle Cost for the Civilian Radioactive Waste Management Program*. DOE/RW-0479, U.S. Department of Energy, Office of Civilian Radioactive Waste Management, Washington, DC.

U.S. Department of Energy (DOE). 1997a. Memo Report from R. Milner to J. Kinzer: *Repository Disposal Fee Estimates for the Hanford Tank Waste Remediation System (TWRS) Environmental Impact Statement (EIS)*. July 1, 1997, U.S. Department of Energy, Office of Civilian Radioactive Waste Management, Washington, DC.

U.S. Department of Energy (DOE). 1997b. Interim Guidance, *US DOE Standard Operating Procedures – OST Technology decision Process*, Office of Environmental Management. As shown at http://oakridge.doe.gov/em/td/sop-r7.pdf on June 29, 2000.

U.S. Department of Energy (DOE). 1998a. *Analysis of the Total System Life Cycle Cost of the Civilian Radioactive Waste Management Program.* DOE/RW-0510, U.S. Department of Energy, Office of Civilian Radioactive Waste Management, Washington, D.C.

U.S. Department of Energy (DOE). 1998b. *Innovative Technology TRUEX/SREX Demonstration Summary Report*. DOE/EM-0419, U.S. Department of Energy, Washington, DC.

U.S. Department of Energy (DOE). 1999a. *Idaho High-Level Waste & Facilities Disposition Draft Environmental Impact Statement*, Volume 1, Chapters 1-4. DOE/EIS-0287D, U.S. Department of Energy, Idaho Operations Office, Idaho Falls, Idaho.

U.S. Department of Energy (DOE) 1999b. *Report to Update Total System Life Cycle Cost Estimate for Site Recommendation/License Application*, Rev. 01. TDR-CRW-SE-000001, U.S. Department of Energy, Washington, D.C.

U.S. Department of Energy (DOE). 2000. Technical Advisory Team Briefing, Oct. 23-27, 2000. S. Subosits, HLW-SDT-2000-00444. Aiken, South Carolina.

U.S. Federal Court (USFC). 1995. *Idaho Settlement Agreement* resulting from Public Service Co. of Colorado v. Batt, No. CV 91-0035-S-EJL (D. Id.) and United States v. Batt, No. CV-91-0065-S-EJL (D. Id.)

Vienna, J.D., M.J. Schwieger, D.E. Smith, H.D. Smith, J.V. Crum, D.K. Peeler, I.A. Reamer, C.A. Musick, and R.D. Tillotson, 1999. *Glass Formulation Development for INEEL Sodium-Bearing Waste*. PNNL-12234, Pacific Northwest National Laboratory, Richland, Washington.

Appendix A

Statement of Work

INTEC Calcine HLW Treatment Technology Roadmap Technical Assessment Review Team Statement of Work

Background

The Tanks Focus Area (TFA) was established to work with users to deliver and implement technical solutions to safely and efficiently accomplish tank waste remediation across the U.S. Department of Energy (DOE) complex, specifically at those DOE sites that have high-level radioactive waste (HLW) tanks. DOE's Idaho Operations Office (DOE-ID) is in the process of preparing a Record of Decision (ROD) on treatment of HLW at the Idaho National Engineering and Environmental Laboratory (INEEL). This waste includes liquid sodium-bearing waste (SBW) in underground tanks and calcine waste stored in aboveground bin sets located at the Idaho Nuclear Technology and Engineering Center (INTEC). At the request of DOE-ID, in June 2000 TFA conducted an independent technical review of technologies under evaluation for treatment of INEEL HLW. Based on the results of that review, in September 2000 DOE-ID requested TFA to review the technology development roadmap for direct vitrification of the site's SBW. Now, DOE-ID has requested TFA to conduct an independent assessment of the technology development roadmap being defined to support decisions on treatment options for the calcine waste. The intent of this review is to assist DOE-ID and the INEEL contractor, Bechtel BWXT Idaho, LCC (BBWI), in developing a valid roadmap and ensuring that the best available information is provided to support the ROD on treatment of INEEL HLW.

INEEL currently has approximately 1.4 million gallons of liquid waste stored in 11 stainless-steel tanks that must be removed from the tanks by 2012 to comply with a State of Idaho agreement that requires ceasing use of the INTEC HLW tanks. In addition, the site has 4,200 cubic meters of mixed HLW calcine waste stored in bin sets, which according to the State of Idaho agreement, must be treated and road-ready by 2035. To comply with these requirements, DOE-ID must have viable treatment options for these wastes that are consistent with both interim and long-term storage and disposal requirements. The previous review conducted by TFA, documented in *Assessment of Selected Technologies for the Treatment of Idaho Tank Waste and Calcine* [PNNL-13268, July 2000], recommended that direct vitrification be considered the primary alternative for treatment of the liquid SBW. At the time of that review, sufficient information was not available to fully evaluate treatment options for calcine waste. Subsequently, the INEEL HLW Program has developed further details and defined a draft technology development roadmap to evaluate options for treatment of calcine waste using a vitrification process. Vitrification of calcine waste is the proposed treatment method, but further technical evaluation is required to determine whether options for pretreatment prior to vitrification need to be considered. The Draft Roadmap defines a path forward to resolving these technical uncertainties, helping to reach a final decision on the calcine waste treatment process selection.

The requested review will focus on assessment of the technical validity and feasibility of the draft technology roadmap for vitrification treatment of calcine waste. To address this request,

TFA will convene a panel of national experts in the appropriate technical areas to perform the assessment. A letter report of the assessment results and recommendations will be provided to both DOE-ID and INEEL/BBWI.

Wallace Schulz, Chair of the TFA Technical Advisory Group, has been selected to head this panel of national experts in the role of Review Panel leader. Betty Carteret, TFA Technology Delivery Manager, will participate as facilitator for the review and assist the Review Panel with conducting and documenting the review. Cheryl Nickola, TFA Program Operations Manager, will assist with planning and organizing the review. Lynne Roeder-Smith, TFA Technical Communications Specialist, will assist the Review Panel in producing the report.

Scope of the Review

The key objective of the review will be to assess whether the draft technology development roadmap proposed to resolve treatment decisions for calcine waste is technically valid, feasible, and complete. The assessment will include an evaluation of the proposed technology development roadmap, current status of research and development work and technical gaps and uncertainties, funding profiles planned to support implementation of the roadmap objectives, and the timing of required development to support decisions on calcine treatment. The Review Panel will also evaluate economic factors that need to be considered with respect to costs for ultimate disposal of the immobilized material in an HLW repository. In addition, the Review Panel will assess the path forward, timing, and ability for DOE-ID and INEEL/BBWI to meet the proposed schedule for finalizing the calcine waste treatment decision. In addition to the independent assessment, DOE-ID and INEEL/BBWI are looking to draw on the technical expertise of the Review Panel to provide additional input and recommendations to support finalizing the roadmap definition.

The review will occur during a three-day review meeting at Idaho Falls, Idaho. Starting the afternoon of February 20, 2001, and continuing through the morning of February 23, 2001, the Review Panel will participate in discussions with INEEL and TFA technical representatives and review materials presented at the meeting. INEEL/BBWI will provide background materials to TFA for the Review Panel in advance of the meeting to assist them in preparing for the review.

Approach

Under the leadership of Dr. Schulz, the Review Panel will review the technology development roadmap developed by the INEEL HLW Program by completing the following activities:

- Review Panel member(s) who did not participate in the previous review effort will review the report *Assessment of Selected Technologies for the Treatment of Idaho Tank Waste and Calcine* [PNNL-13268, July 2000] to prepare for the review effort.

- In advance of the meeting, the Review Panel will evaluate materials from INEEL and TFA that provide background information relevant to the review. The Review Panel will participate in telephone conferences to prepare for the review meeting and discuss responsibilities related to assignments for technical review and report production.

- The Review Panel will meet in Idaho Falls, Idaho on February 20 through 23, 2001, for detailed briefings and deliberations on the proposed technology roadmap. The meetings will include time for questions and discussion between the Review Panel, DOE-ID, INEEL staff, and TFA staff. These discussions will provide an opportunity for the Review Panel to consider

    - the proposed calcine treatment technology roadmap and the underlying technical bases (e.g., functional requirements, key technical assumptions, waste acceptance criteria),
    - the technical maturity of work performed to date or proposed on waste characterization, retrieval, pretreatment processes, glass formulation, and melter development supporting the vitrification of calcine waste,
    - the scope and timing of proposed TFA- and site-funded research and development work planned for Fiscal Year 2001 and beyond,
    - the funding profile proposed to support the research and development efforts defined in the proposed calcine treatment technology development roadmap, and
    - HLW disposal cost considerations that may impact technical decisions on alternatives for vitrification treatment of calcine with or without implementing pretreatment process operations.

  TFA will work with DOE-ID and INEEL staff to prepare a detailed agenda for the meeting. Presentations by DOE-ID and INEEL staff and open discussions with the Review Panel will be the primary focus of the meeting. Meeting presentations may include information on related TFA investments. Four TFA Technology Integration Managers, or their chosen representatives, who have technical expertise in the areas of waste characterization, retrieval, pretreatment, and immobilization will participate to provide information on past and ongoing TFA investments relevant to this assessment.

- Executive sessions of the Review Panel will be held during the meeting to identify recommendations and conclusions. The Review Panel may request additional information from INEEL staff to support deliberations. A draft review report will be initiated at the meeting and completed offsite. The Review Panel will provide a meeting closeout briefing to DOE-ID and INEEL/BBWI management on Friday, February 23, 2001, to communicate initial reactions resulting from the review.

- The Review Panel leader and deputy, with TFA support, will consolidate input and comments from team members and prepare a draft letter report documenting their conclusions, findings, and recommendations. Review Panel members will review, comment, and provide additional input to the team leader during the week of March 5, 2001. TFA will provide a letter report documenting the Review Panel's recommendations by March 23, 2001, to DOE-ID with copy to INEEL/BBWI for their use in refining and evaluating the calcine treatment technology development roadmap.

- The Review Panel leader, members of the Review Panel, and TFA staff, if needed, will be available to participate in a subsequent telephone conference with DOE-ID and INEEL/BBWI to discuss the report results. This need will be determined subsequent to the review meeting.

Schedule and Deliverables

The review period will extend from early February through March 2001, including pre-meeting review of advance materials, conducting the review meeting, and producing the review report. One meeting of the Review Panel is assumed for the week of February 19, 2001, in Idaho Falls. A final letter report of the assessment would be provided to DOE-ID by March 23, 2001.

Non-Disclosure Agreement

Some of the information being reviewed by the Review Panel may require its members to sign and abide by a non-disclosure agreement. No materials or information have been determined to be confidential or proprietary prior to the meeting. Any protected information will be clearly identified as such by presenters at the meeting prior to discussion of those topics.

Review Team Membership

The following individuals have been selected for the TFA Review Panel:

Team Members

Wallace W. (Wally) Schulz, Consultant, W2S Company, Inc.
- Panel Leader
- Pretreatment

Russell L. Treat, Dade Moeller and Associates, Inc.
- Deputy Panel Leader
- Characterization and Retrieval

Clayton T. Crowe, Consultant, Emeritus Professor, Washington State University
- Multi-phase Transport, Retrieval

Joseph F. Ortaldo, Westinghouse Savannah River Co.
- Immobilization

John H. Roecker, Consultant
- General, Systems, and Economic Analysis

Larry L. Tavlarides, Consultant, Syracuse University
- Pretreatment

George F. Vandegrift, Argonne National Laboratory
- Pretreatment

E. Thomas (Tom) Weber, Consultant
- Immobilization and Economic Analysis

TFA Staff Support

The following TFA Technical Team staff will support the review team in organizing and conducting the review.

Betty A. Carteret, Review Facilitator
Peter W. Gibbons, Retrieval Technology Integration Manager
E. W. (Bill) Holtzscheiter, Immobilization Technology Integration Manager
C. Phil McGinnis, Pretreatment Technology Integration Manager
Cheryl L. Nickola, Review Coordinator
Lynne R. Roeder-Smith, Technical Communications Specialist
Thomas R. Thomas, Characterization Technical Integration Manager

Appendix B

Resumes

Wallace W. Schulz

Education

University of Nevada, B.S., Chemistry
University of Nevada, M.S., Chemistry
Completed coursework equivalent to Ph.D., Joint Center for Graduate Study

Occupation

Nuclear Consultant

Employer

W2S Co., Inc. - Albuquerque, New Mexico

Representative Skills and Experience

Mr. Schulz is a world-class authority on nuclear chemical separations and waste disposal technology. During his more than 38-year career at the U.S. Department of Energy at the Hanford Site, he actively participated in development and plant-scale implementation of several important chemical separations processes. These processes included PUREX (plutonium-uranium extraction) for recovery and purification of uranium and plutonium from irradiated reactor fuel; the reduction-oxidation and plutonium-uranium extraction processes to recover and purify uranium and plutonium from irradiated reactor fuel; the RECULPEX process for recovery and purification of plutonium from metallurgical scrap; the TBP extraction process used to recover and purify uranium from aged bismuth phosphate process waste; the ferrocyanide scavenging process to remove cesium-137 from various nuclear waste streams; and the solvent extraction process used at Hanford's B Plant to remove and recover strontium-90 from several sources. In addition, Mr. Schulz is the co-inventor of the TRUEX (transuranium extraction) process. He currently owns and operates his own consulting company, W2S Co., Inc. Mr. Schulz has 21 patents.

Publications

Mr. Schulz has edited or co-edited 11 books and has published over 100 journal papers and technical reports.

Affiliations

American Nuclear Society, American Chemical Society, The Metallurgical Society, and Sigma Xi.

Russell L. Treat

Education

Washington State University, B.S., Chemical Engineering

Occupation

Engineering and Environmental Consultant

Employer

Dade Moeller & Associates, Inc. – Richland, WA

Representative Skills and Experience

Mr. Treat is providing engineering and management consulting services to various U.S. Department of Energy (DOE) and DOE prime contractors. Recently, Mr. Treat managed the $50 million/year Waste Feed Delivery System Definition Program in support of the River Protection Project at the Hanford Site. He also managed the $7 million/year, 100 full-time equivalent Hanford Waste Technology Program for Pacific Northwest National Laboratory (PNNL), which included the grout, performance assessment, single-shell tank (SST) characterization, SST ferrocyanide studies, and double-shell tank (DST) Waste Retrieval Programs. He also served as project manager of Foster Wheeler's $25 million Environmental Restoration and Waste Management support project for Westinghouse Hanford Company. Mr. Treat started Foster Wheeler's office in Richland in 1989 and managed up to 31 staff.

His experience is divided between DOE contractors (Atlantic Richfield Hanford Company, PNNL, and MAC Technical Services for 18 years) and commercial enterprises (ALCOA, Foster Wheeler, and Dade Moeller for 12 years), providing understanding and balance in the methods employed by both the DOE and commercial sectors. Mr. Treat has served on numerous expert panels, including SST/DST technologies, Hanford grout, and design of the Idaho National Engineering and Environmental Laboratory PREPP facility.

Publications

Mr. Treat has more than 35 technical publications and presentations and a patent on a method for closing hazardous waste sites. In addition he authored a chapter on in-situ vitrification in a book on waste solidification and stabilization technologies published in 1997.

Clayton T. Crowe

Education

University of Michigan, Ph.D., Aerospace and Astronautical Engineering
Massachusetts Institute of Technology, M.S., Aerospace Engineering
University of Washington, B.S., Aeronautical Engineering

Occupation

Professor Emeritus, School of Mechanical and Materials Engineering

Employer

Washington State University - Pullman, Washington

Representative Skills and Experience

Professor Crowe has an international reputation for his work in fluid mechanics and multiphase flows. His work has involved gas/particle separation systems, pollution control, pneumatic transport, spray drying, spray forming, erosion, and multiphase flows in bio-aerosol applications. He developed the particle-source-in-cell method for modeling dispersed-phase flows that is used in the majority of commercial codes for multiphase flows. He has acted as a consultant for approximately 20 industries and laboratories and gave several workshops on multiphase flow modeling. He has been very active in professional organizations. He has organized many American Society of Mechanical Engineers (ASME) symposia on multiphase flows and has served on ASME Multiphase Flow Committees and Fluids Engineering Executive Committee. He is currently Chairman of the Advisory Committee for the International Conference on Multiphase Flows and will receive the International Prize for Multiphase Flows in May 2001.

Publications

Professor Crowe has co-authored two books on fluid mechanics and multiphase flows and contributed over ten chapters to various books and handbooks. He has published over 120 papers in the reviewed literature and gave over 70 invited presentations nationally and internationally.

Affiliations

Fellow of the ASME Engineers, University of Florida Engineering Research Center for Multiphase Flows, Institute for Materials Processing at the University of Bremen, Innova-Tek Corporation in Richland, WA, International Conference on Multiphase Flows and a panel member on a number of NSF Review Panels.

Joseph F. Ortaldo

Education

Villanova University, B.S., Chemical Engineering
University of Pennsylvania, M.S., Chemical Engineering

Occupation

Engineering Manager

Employer

Westinghouse Savannah River Company - Aiken, South Carolina

Representative Skills and Experience

Mr. Ortaldo is a registered professional engineer and has 38 years of experience with DuPont and Westinghouse Savannah River Company. Commercial assignments with DuPont include areas of research and development, pilot-plant operation, new venture development, and chemical plant technical support and operations.

Nuclear-related assignments with DuPont and Westinghouse Savannah River Company have been associated with research and development activities related to the Defense Waste Processing Facility and engineering and technical support for the operation of Westinghouse Savannah River Company Purex Operations (recovery of uranium-235 and plutonium-239). His most recent position has been related to the start-up of operation of the Defense Waste Processing Facility.

Affiliations

American Institute of Chemical Engineers, National Society of Professional Engineers, and National Management Association

John H. Roecker

Education

University of Illinois, BS, Engineering Physics
University of Illinois, Graduate Studies in Physics

Occupation

Nuclear Waste Management Consultant - Colbert, WA

Representative Skills and Experience

Mr. Roecker has experience with the successful management of large engineering, operating, and program organizations employing complex technology and nuclear operations. He has a broad technical background encompassing nuclear reactor testing, nuclear power operation, nuclear chemical processing, and nuclear and hazardous waste processing. Mr. Roecker has directed the development and engineering of process improvements leading to increased plant throughput and long-term waste disposal cost savings. He also directed development and implementation of an integrated systems engineering management process for a large, diverse organization. He is experienced with development and management of customer and contractor interfaces, and he is recognized and respected as a developer of young management and technical talent.

Publications

Mr. Roecker has authored or co-authored papers and reports in the fields of nuclear reactor testing, nuclear space power, and nuclear waste management and processing.

Affiliations

American Nuclear Society

Lawrence L. Tavlarides

Education

University of Pittsburgh, Ph.D., Chemical Engineering
University of Pittsburgh, M.S., Chemical Engineering
University of Pittsburgh, B.S., Chemical Engineering

Occupation

Professor, Department of Chemical Engineering and Materials Science

Employer

Syracuse University - Syracuse, New York

Representative Skills and Experience

Dr. Tavlarides is internationally known for his research contributions to chemical separations science. His research involves application of novel separation processes and concepts to solving environmental problems, including metal ion separations from waste streams by synthesized inorganic chemically active adsorbents, supercritical extraction and water oxidation for soil decontamination, kinetics of the Fisher-Tropsch synthesis reaction, biochemical separations with solvent extraction, and development of instrumentation for liquid-liquid and gas-liquid-solid dispersions. Dr. Tavlarides has served as co-chair of 27 international, national, and regional symposia. He has nine patents.

Publications

Dr. Tavlarides has published more than 100 scholarly papers and has presented 68 papers at invited seminars.

Affiliations

Fellow of American Institute to Chemical Engineers; President of North American Mixing Forum (1997-1999); member of American Chemical Society; Pacific Northwest National Laboratory, Affiliated Staff Scientist; and panel member on a number of National Science Foundation and National Research Council committees.

George F. Vandegrift

Education

Iowa State University, Ph.D., Inorganic Chemistry
Lowell Technological Institute (currently Lowell University), B.S., Chemistry

Occupation

Senior Scientist, Leader, Separation Science and Technology Group, Chemical Technology Division

Employer

Argonne National Laboratory - Argonne, Illinois

Representative Skills and Experience

Dr. Vandegrift's specialties include chemical separation processes; solution chemistry; radiochemistry; modeling of chemical processes; process design and development; waste management; and waste disposal. Currently, he is principal investigator of generic transuranic extraction model development and validation, and principal investigator for developing chemical means for converting molybdenum-99 production from high- to low-enriched uranium targets. Dr. Vandergrift has four patents.

Publications

Dr. Vandegrift has published more than 160 journal articles, book chapters, and reports in basic chemistry and applied topics in separation science.

Affiliations

American Chemical Society

E. Thomas Weber

Education

Rutgers University, Ph.D., Ceramic Science
Rutgers University, B.S., Ceramics

Occupation

Consultant - Kennewick, Washington

Representative Skills and Experience

Dr. Weber has managed various vitrification projects for the Hanford Site, including vitrification development for the Hanford Tank Waste Remediation System following closeout of the Hanford Waste Vitrification Plant. He managed the Applied Technology for the Hanford Waste Vitrification Plant, where he focused on providing the technological base for the vitrification processes and plant engineering work. Dr. Weber was responsible for replanning Hanford waste vitrification technology requirements and approaches to fulfill the 1993 Tri-Party Agreement milestones. He managed low-level waste melter technology evaluation contracting and requirements for supporting technology. He also coordinated replanning of high-level waste technology requirements and assessment to meet the higher capacity vitrification plant needs. Dr. Weber holds two patents.

Publications

Dr. Weber has written over 40 symposium presentations, published papers, and reports.

Affiliations

American Ceramic Society and American Nuclear Society.

Appendix C

Review Agenda

Review Agenda

TFA Review of INEEL Calcine Treatment Roadmap
February 20-23, 2001

Tuesday (20 Feb)

10:00am – 11:30am	Review Team Executive Session
1:00pm – 1:30pm	Introductions, Background, Scope of Review (Joel Case, State of Idaho, Betty Carteret, Jim Valentine)
1:30pm – 2:30pm	Process treatment scenarios roadmapped (Arlin Olson)
2:30pm – 2:45pm	Break
2:45pm – 3:45pm	Roadmap Organization, Decision Point Descriptions, Separations Screen Decision (James Murphy)
3:45pm – 5:00pm	Cost Discussion (Rick Adams, Bob Peel)

Wednesday (21 Feb)

8:00am – 9:00am	Characterization/Retrieval Uncertainties
9:00am – 10:30am	Full Separations Uncertainties
10:30am – 10:45am	Break
10:45am – 12:00am	UNEX Uncertainties
12:00pm – 1:15pm	Lunch
1:15pm – 2:30pm	Vitrification Uncertainties
2:30pm – 3:30pm	Off-gas Uncertainties
3:30pm – 3:45pm	Break
3:45pm – 4:45pm	Secondary Waste Uncertainties & Wrap-up
4:45pm – 5:00pm	Wrap-up

Thursday (22 Feb)

7:30am – 9:00am	Review Team Executive Session
9:00am – 11:30am	Follow up with TIMs, TFA experts, BBWI s Staff
11:30am – 1:00pm	Working Lunch
1:00pm – 4:00pm	Report Development
4:00pm - 5:00pm	Review Team Executive Session

Friday (23 Feb)

Morning	Review Team Executive Session
Afternoon	Review Team Debrief to DOE-ID/INEEL/BBWI (1 hour)

DISTRIBUTION

No. of Copies

(22) OFFSITE

L.D. Bustard
Sandia National Laboratories
PO Box 5800, MS: 0734
Albuquerque, NM 87185-5800

J.T. Case
U.S. Department of Energy
Idaho Operations Office
850 Energy Drive
Idaho Falls, ID 83401

C.T. Crowe
Washington State University
ELEC MECH 145
Pullman, WA 99164-2920

K.D. Gerdes
U.S. Department of Energy
Office of Science and Technology
20400 Century Blvd.
1154/Cloverleaf Bldg.
Germantown, MD 20874-1290

E.W. Holtzscheiter
Westinghouse Savannah River Company
Savannah River Technology Center
Bldg. 773-A/A-229 Rm. MS: 28
Aiken, SC 29802

R.J. Kimmel
U.S. Department of Energy
Idaho Operations Office
750 DOE Place
Idaho Falls, ID 83402

No. of Copies

K.A. Lockie
U.S. Department of Energy
Idaho Operations Office
750 Doe Place (MS 1145)
Idaho Falls, ID 83402

C.P. McGinnis
Oak Ridge National Laboratory
PO, Box 2008, MS: 6178
Oak Ridge, TN 37831-6273

J.L. Murphy
Bechtel BWXT Idaho, Inc.
PO Box 1625 MSIN: 3404
Idaho Falls, ID 83402-4453

C. A. Musick
Bechtel BWXT Idaho, Inc.
PO Box 1625, MS 5218
Idaho Falls, ID 83415

(4) A.L. Olson
Bechtel BWXT Idaho, Inc.
PO Box 1625, MS: 5218
Idaho Falls, ID 83415

J.F. Ortaldo
Westinghouse Savannah River Company
Bldg. 704-S
Aiken, SC 29808

J.A. Rindfleisch
Bechtel BWXT Idaho, Inc.
PO Box 1625, MS 5218
Idaho Falls, ID 83415

J. Roach
Bechtel BWXT Idaho, Inc.
PO Box 1625, MS 3710
Idaho Falls, ID 83415

No. of Copies

J.H. Roecker
17123 N. Brookside Lane
Colbert, WA 99005

W.W. Schulz
W2S Company, Inc.
12704 Sandia Ridge Place, NE
Albuquerque, NM 87111

L.L. Tavlarides
Dept. of Chemical Engineering & Materials Science
334 Hinds Hall
Syracuse, NY 13244-1190

T.R. Thomas
Bechtel BWXT Idaho, Inc. (BBWI)
PO Box 1625 MSIN 3760
Idaho Falls, ID 83415-3760

J.H. Valentine
Bechtel BWXT Idaho, Inc.
PO Box 1625, MS-3211
Idaho Falls, ID 83415-3100

G.F. Vandegrift
Chem Tech Division
Argonne National Laboratory
Bldg 205,
9700 S. Class Avenue
Argonne, IL 60439

E.T. Weber
6622 West Victoria
Kennewick, WA 99336

No. of Copies

(2) DOE/Office of Scientific and Technical Information

(15) ONSITE

DOE Richland Operations Office

T.P. Pietrok K8-50

Dade Moeller and Associates, Inc.

R.L. Treat H6-60

Los Alamos National Laboratory, Tanks Focus Area

M.T. Terry K9-91

Numatec Hanford Corporation

P.W. Gibbons K9-91

Pacific Northwest National Laboratory

T.M. Brouns K9-69
B.A. Carteret K9-91
C.L. Nickola K9-69
L.R. Roeder-Smith K9-69
(7) Information Release Office K1-06