WSRC-TR-2001-00310, Rev. 0

Software Design Document for the Vitrification Flowsheet Model of INEEL Sodium Bearing Waste

N. D. Hutson

W. E. Daniel

Immobilization Technology Section
Savannah River Technology Center

June 30, 2001

Westinghouse Savannah River Company
Savannah River Technology Center
Aiken, SC 29808

DISCLAIMER NOTICE

This report was prepared for the US Department of Energy – Environmental Management (DOE-EM) Office of Science and Technology (OST) by the Savannah River Technology Center (SRTC) under the auspices of the Tanks Focus Area (TFA) Technical Task Plan SR16WT31. The Savannah River Technology Center is the applied research and development laboratory of the Savannah River Site (SRS) and is operated by Westinghouse Savannah River Company (WSRC) for the US Department of Energy under Contract DE-AC09-96SR18500. Neither WSRC, DOE, the US Government, nor any person acting on their behalf makes any warranty, expressed or implied, or assumes any legal liability or responsibility for the accuracy, completeness, or usefulness of any information, apparatus, product, or process disclosed, or represents that its use would not infringe privately owned rights. Reference herein to any specific commercial product, process, or service by trade name, trademark, manufacturer, or otherwise, does not necessarily constitute or imply its endorsement, recommendation, or favoring by WSRC, DOE, or the U.S. Government. The views and opinions of authors expressed herein do not necessarily state or reflect those of WSRC, DOE, or the U.S. Government.

Savannah River Technology Center

operated by

WESTINGHOUSE SAVANNAH RIVER COMPANY

for the

UNITED STATES DEPARTMENT OF ENERGY

under Contract DE-AC09-96SR18500

Approvals

N. D. Hutson
SRTC, Immobilization Technology

W. E. Daniel
SRTC, Immobilization Technology

David Crowley, L4 Manager
SRTC, Immobilization Technology

John Connelly
SRTC, Quality Assurance

Technical Review

Frank Smith
SRTC, Immobilization Technology

CONTENTS

1.0 INTRODUCTION 1

2.0 TECHNICAL DESCRIPTION OF THE SOFTWARE 2

2.1 Description of Theoretical Basis **2**

2.2 Description of Mathematical Model **2**

2.3 Description of Control Flow **2**

2.4 Description of Data Flow **11**

2.5 Description of Data Structure **12**

2.6 Description of Numerical Methods **13**

2.7 Description of Physical Models **13**

2.8 Description of Process Flow **14**

2.9 Description of Process Structures **18**

2.10 Description of Relationship Between Data Structures and Process Standards **18**

3.0 DESCRIPTION OF RANGES OF INPUTS AND OUTPUTS 19

4.0 DESCRIPTION OF HOW TO CONVERT DESIGN INTO CODE 20

5.0 DESCRIPTION OF APPROACH FOR TEST ACTIVITIES 37

6.0 REFERENCES 38

1.0 Introduction

The High Level Waste (HLW) Program at INEEL must implement technologies and processes to treat and qualify radioactive wastes located at Idaho Nuclear Technology and Engineering Center (INTEC) for permanent disposal. Direct vitrification has been accepted as the processing technology for immobilization of the liquid Sodium Bearing Waste (SBW). Several technical paths are still being considered for treatment and disposal of the solid calcined waste. These alternatives include two separations paths and one direct vitrification path. The activities necessary to reach a recommendation for a single technology are expected to be complete by the end of FY05 (provided adequate funding is available). For adequate evaluation and comparison of treatment paths for the Sodium Bearing Waste and Calcine wastes, each option must have a process flow diagram and an associated mass and energy balance. The work described in this report will create the steady-state flowsheets for the SBW treatment and provide a technical basis for performing task development activities such as selecting unit operations and equipment for cost estimates, safety evaluations, and estimates of impact to the environment.

Flowsheet Simulation is the use of a computer program to quantitatively model the characteristic equations of a chemical process. In doing this, the model uses underlying physical relationships such as mass and energy balance, equilibrium, and rate correlations (for reaction and mass/heat transfer). An effective flowsheet simulation model is then able to predict stream flowrates, compositions, and properties. The flowsheet can also be used to predict operating conditions and can be used to determine the proper size of process equipment.

An effective flowsheet simulation model offers the advantage of reduced design time, since the designer can quickly test various plant configurations. The process flowsheet model can also help answer “what if” questions, determine optimal process conditions within given constraints, and assist in locating constraining parts of a process (the “bottlenecks”).

In the development of the Vitrification Flowsheet Model for INEEL Sodium Bearing Waste, the commonly used Aspen Plus® 10.2 software package (© AspenTech, Inc.) will be employed. A detailed description of the logical process used to select this software tool has been documented by INEEL personnel (Nichols et al., 2001b). Additional information on the specific capabilities of Aspen Plus® 10.2 can be found in the User Guide.

2.0 Technical Description of the Software

2.1 Description of Theoretical Basis

The design of the INEEL flowsheet model will follow guidance provided in the Process Options Description document (Nichols *et al*., 2001a). Table I of that document provides detailed descriptions of unit operations in each of the candidate process flowsheet options. Within each possible unit operation (e.g., mixing tank, melter), associated phenomena that must be modeled (or considered) are listed. The current INEEL approach (for evaluation of flowsheets using spreadsheets) and the planned SRTC approach (for flowsheet modeling using Aspen Plus®) are also listed. The approach is designated as “black box”, “white box”, or “gray box”. The “black box” approach is one in which empirical or design/vendor data (rather than physical or thermodynamic principles) are used to describe a process operation. The “gray box” approach is one in which a process operation is partially described by approximations based on physical or thermodynamic principles and/or semi-empirical relationships. The “white box” approach is one in which a process is described entirely by physical or thermophysical principles. Modeling approaches and important parameters for associated phenomena (e.g., adsorption, gas/liquid/solid equilibrium) are described in Table II of the Process Options Descriptions document (Nichols *et al*., 2001). The actual modeling approach used in the flowsheet model will be described in the “User Documentation for the Integrated Flowsheet”, which will describe the completed flowsheet model.

2.2 Description of Mathematical Model

In the development of the Vitrification Flowsheet Model for INEEL SBW, the commercial Aspen Plus® 10.2 software package (© AspenTech, Inc.) will be used. Aspen Plus® is a sequential modular simulation program in that each unit operation block is solved in a certain sequence (rather than simultaneously, as is done in the Aspen Custom Modeler®, ACM, package). Some important features of Aspen Plus® are (1) rigorous electrolyte simulation, (2) solids handling, (3) data regression, (4) data fit, (5) optimization, and (6) custom user routines. A detailed description of the logical process used to select the software tool has been documented by INEEL personnel (Nichols et al., 2001b). Additional information on the specific capabilities of Aspen Plus® 10.2 can be found in its User Guide.

2.3 Description of Control Flow

The Aspen Plus® simulation environment works by first defining the components and then the property databanks to be used in the process simulation followed by the definition of the process streams and unit operations.

The component specification defines all elements and reactive species involved in the flowsheet simulation. The components used in the Idaho flowsheet simulation will be defined in Aspen OLI and then transferred to Aspen

Plus® via the Aspen-OLI bridge. An example of the Aspen-OLI component definition is shown in Figure 1. The component definition may also be done in Aspen Plus® using their electrolyte chemistry databank, which has less components than OLI but a wider composition range.

After the components are defined, the property databank or databanks are chosen using another Aspen Plus® GUI (Graphical User Interface). For the Idaho flowsheet work the OLI databank will be used like shown in Figure 2. Other databanks may be used depending on the range of compositions and the type of components.

The material streams are defined using a similar Aspen Plus® GUI interface as shown in Figure 3. The user clicks the type of stream desired and then clicks in the flowsheet area where to put the stream. Material, Work, or Heat streams are all created in a similar fashion. Once the stream is created, its properties are defined in another GUI as shown in Figure 4. These properties depend upon the particular process simulation and are defined in detail in Nichols *et al*. (2001).

Once the material streams are defined, the unit operation blocks are defined using the Aspen Plus® GUI. The user selects from the Aspen Plus® library of unit operation blocks and then clicks on the flowsheet to place the unit operation block. An example of the Aspen Plus® unit operation GUI is shown in Figure 5. Once the unit operation block is chosen, another Aspen Plus® GUI is used to set the properties of the unit block as shown in Figure 6.

The above techniques are used repeatedly to construct an entire flowsheet that simulates the desired process. Once a flowsheet is built, the user runs the process simulation by clicking on the control buttons in the Aspen Plus® GUI. Figure 7 shows the run control buttons highlighted. These control buttons allow one to run the flowsheet simulation, stop it, and/or reset it. The Aspen Plus® flowsheet simulates blocks starting from the upper leftmost position down to the lower right most position moving left to right. If there are recycle streams, initial values are used and the whole flowsheet simulated until the recycle streams converge. Convergence is based on a tolerance error for the numerical techniques defined by the user. After a successful run, Aspen Plus® presents the results in a GUI as shown in Figure 8. One may view all stream results or select specific streams. The results may be saved, printed, or exported to other some other program.

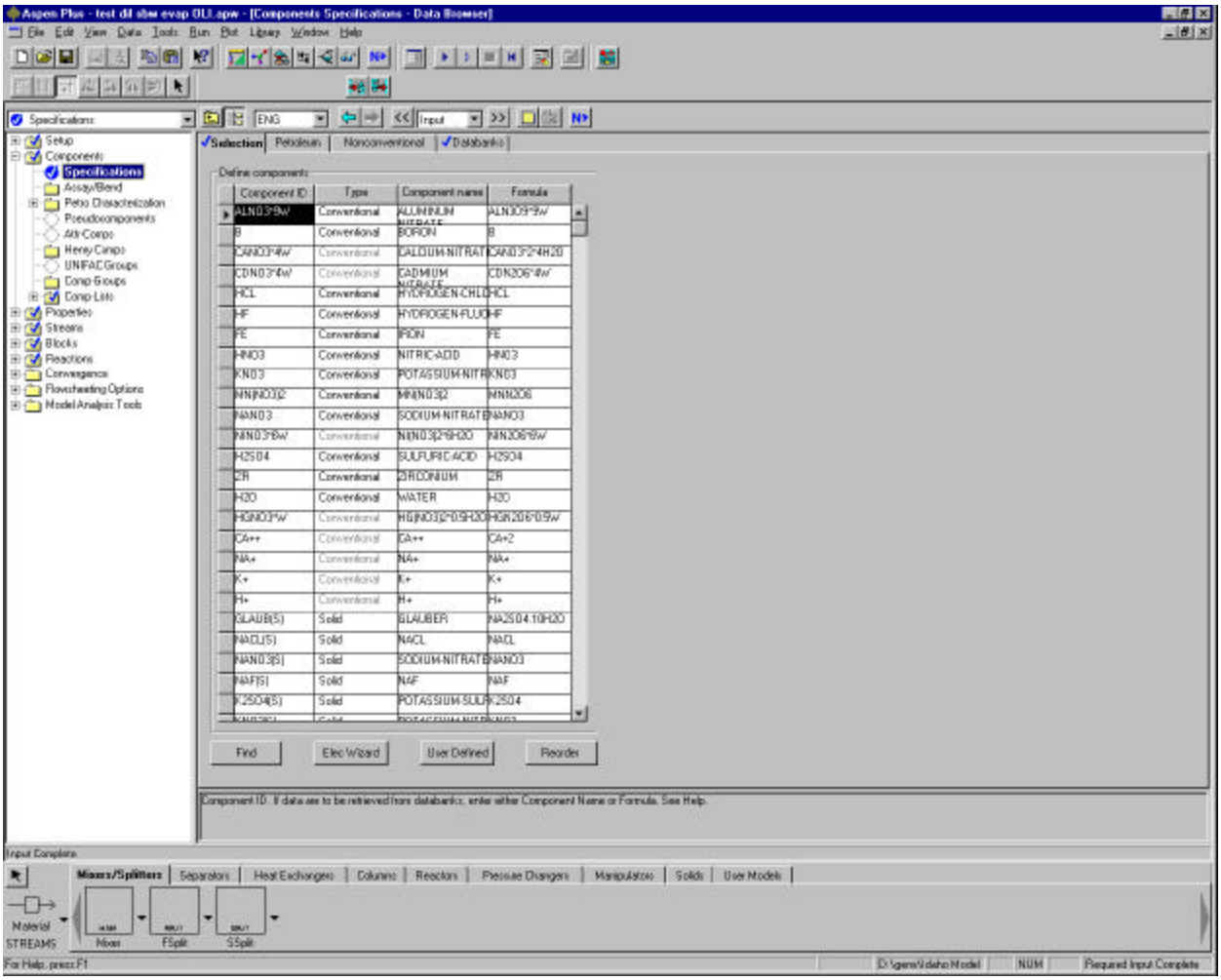

Figure 1. Aspen Plus® GUI for component definition

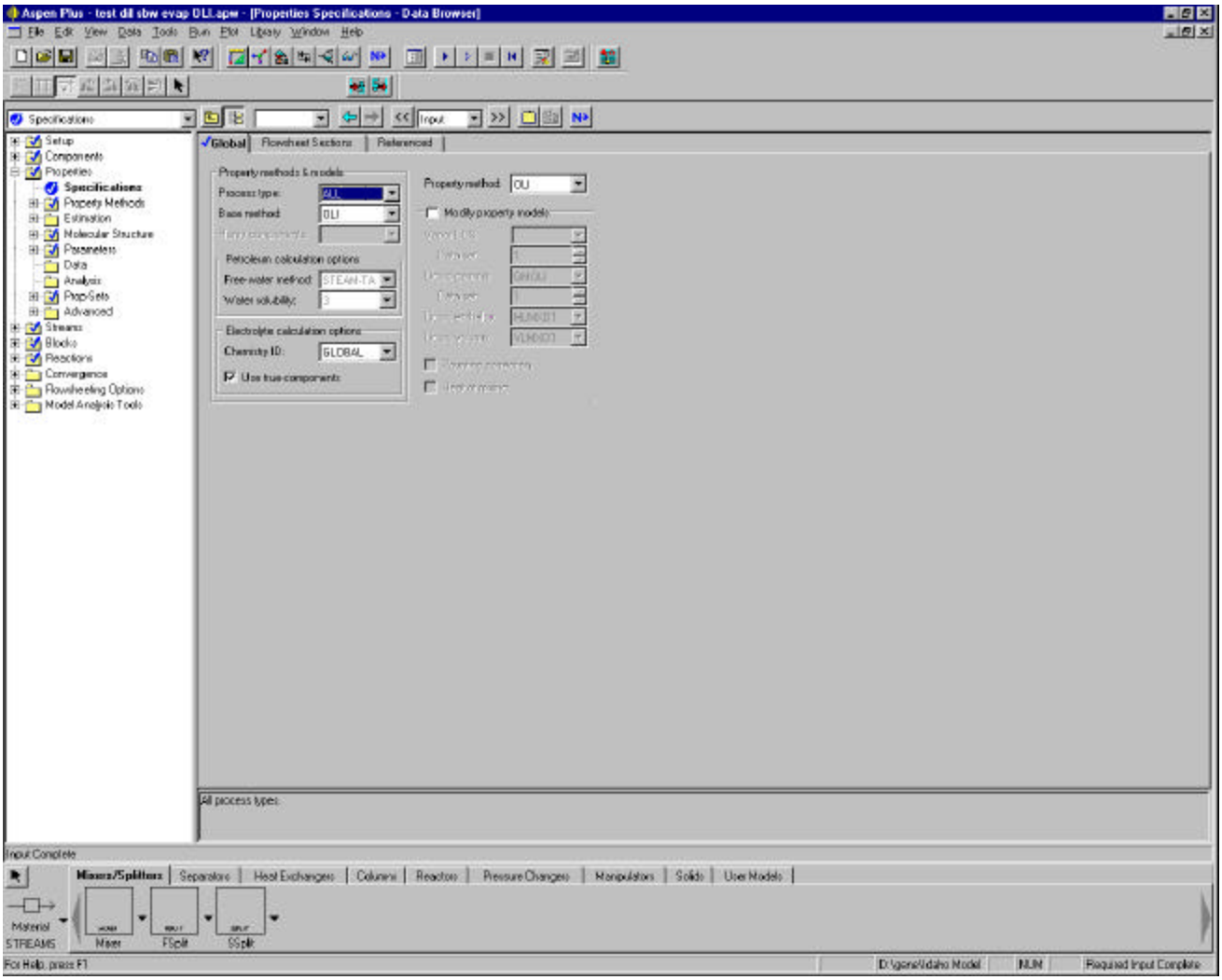

Figure 2. Aspen Plus® GUI for property databank definition

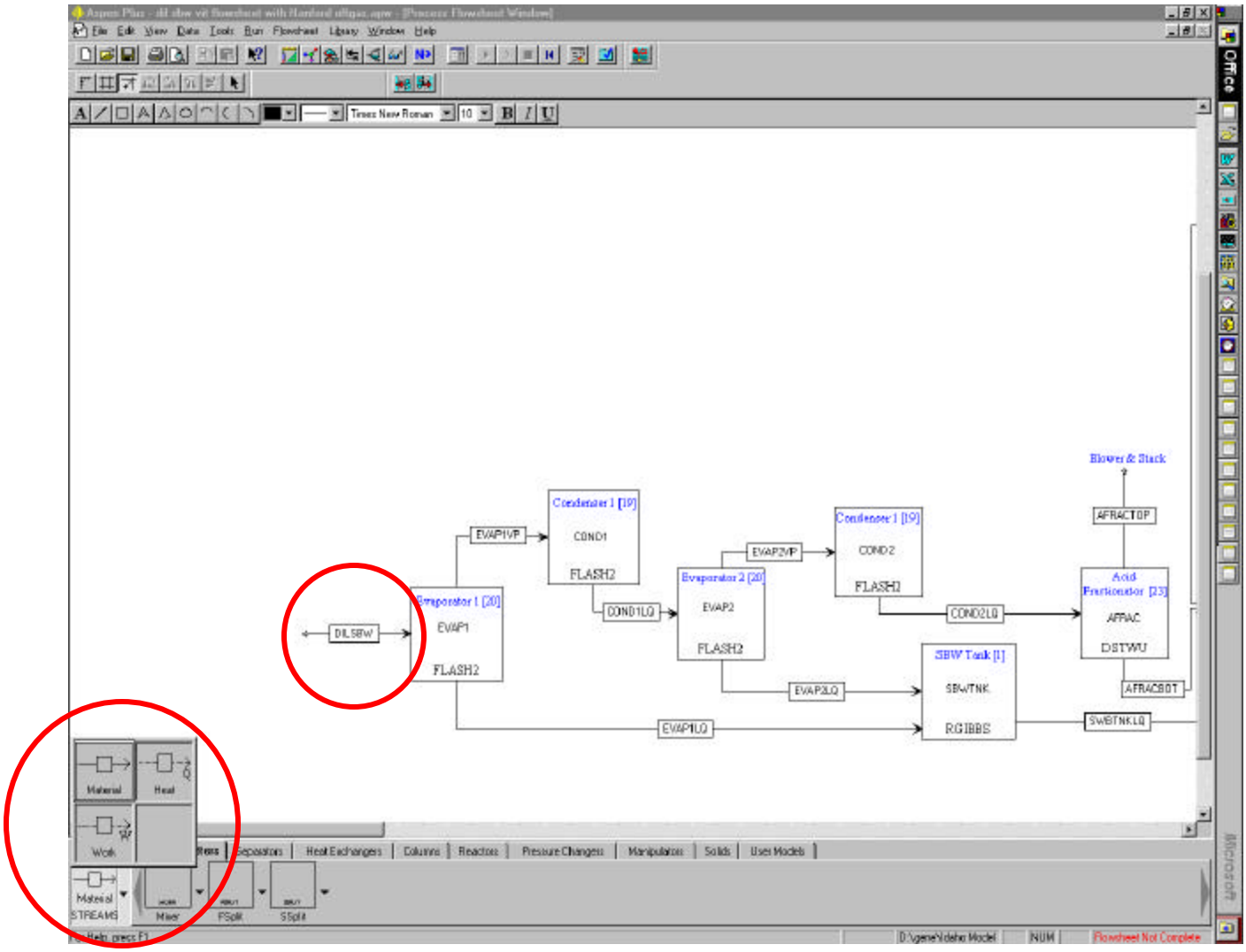

Figure 3. Aspen Plus® GUI with material stream interface and example stream highlighted

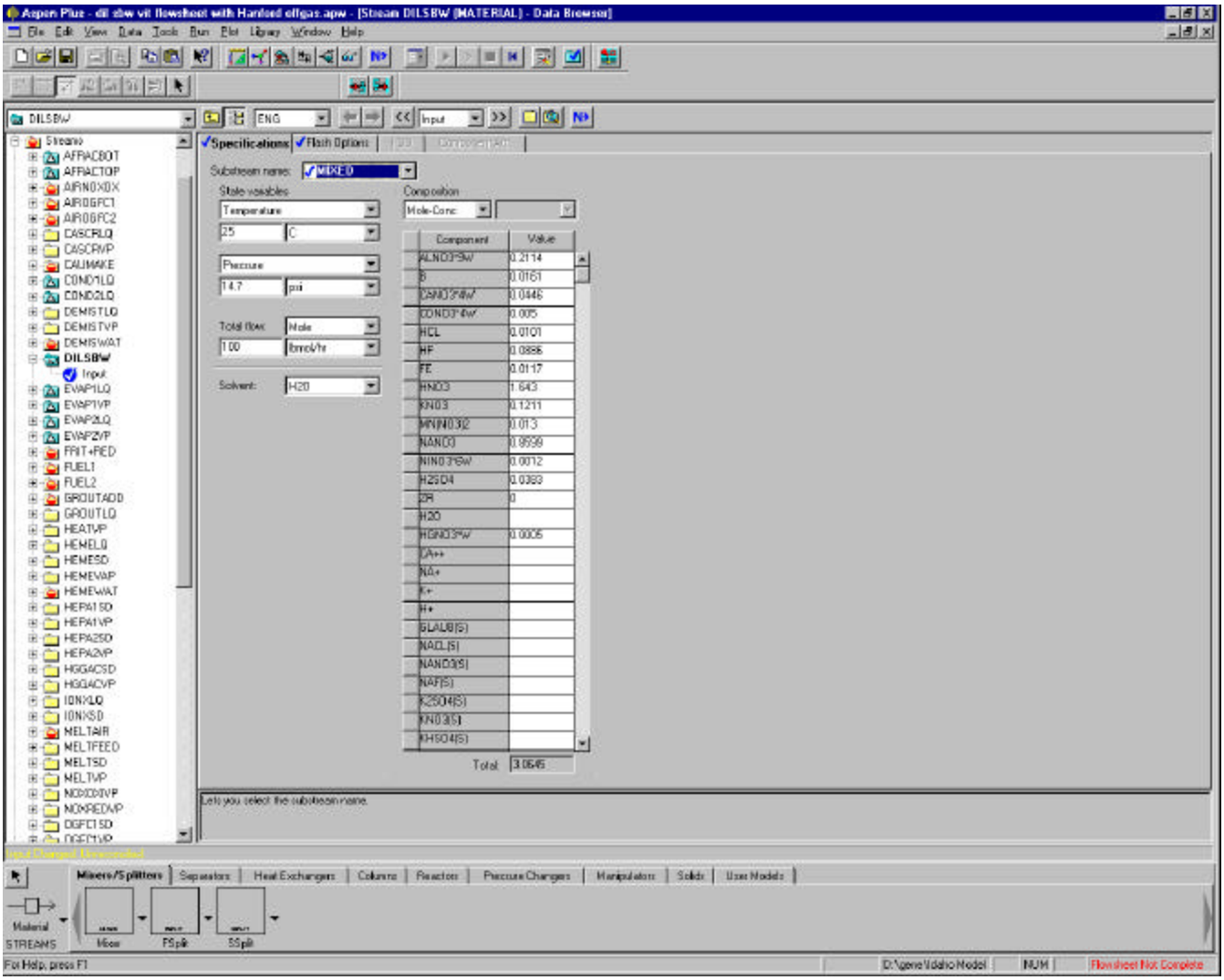

Figure 4. Aspen Plus® GUI for stream properties like temperature, pressure, and concentrations

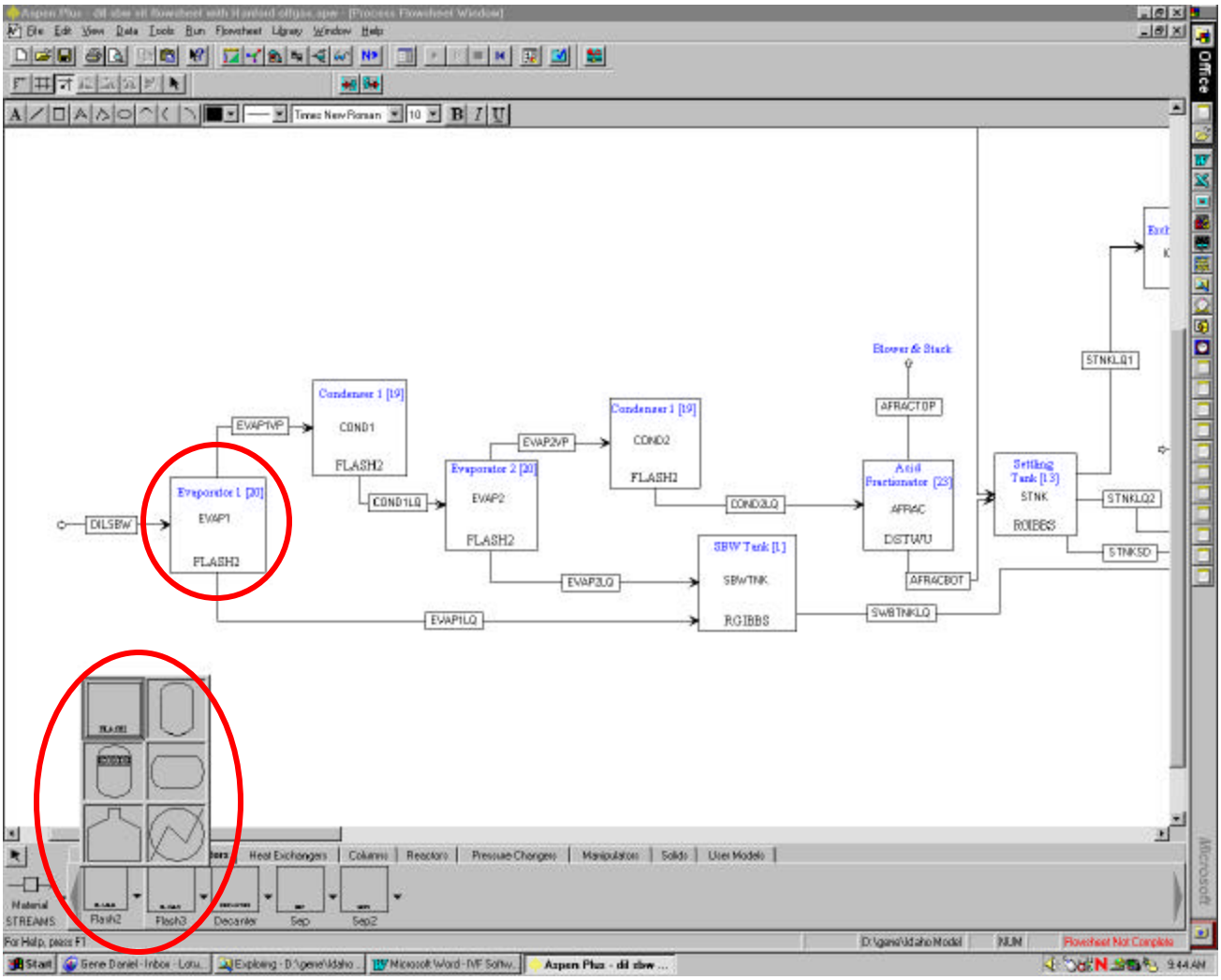

Figure 5. Aspen Plus® GUI for unit operation selection

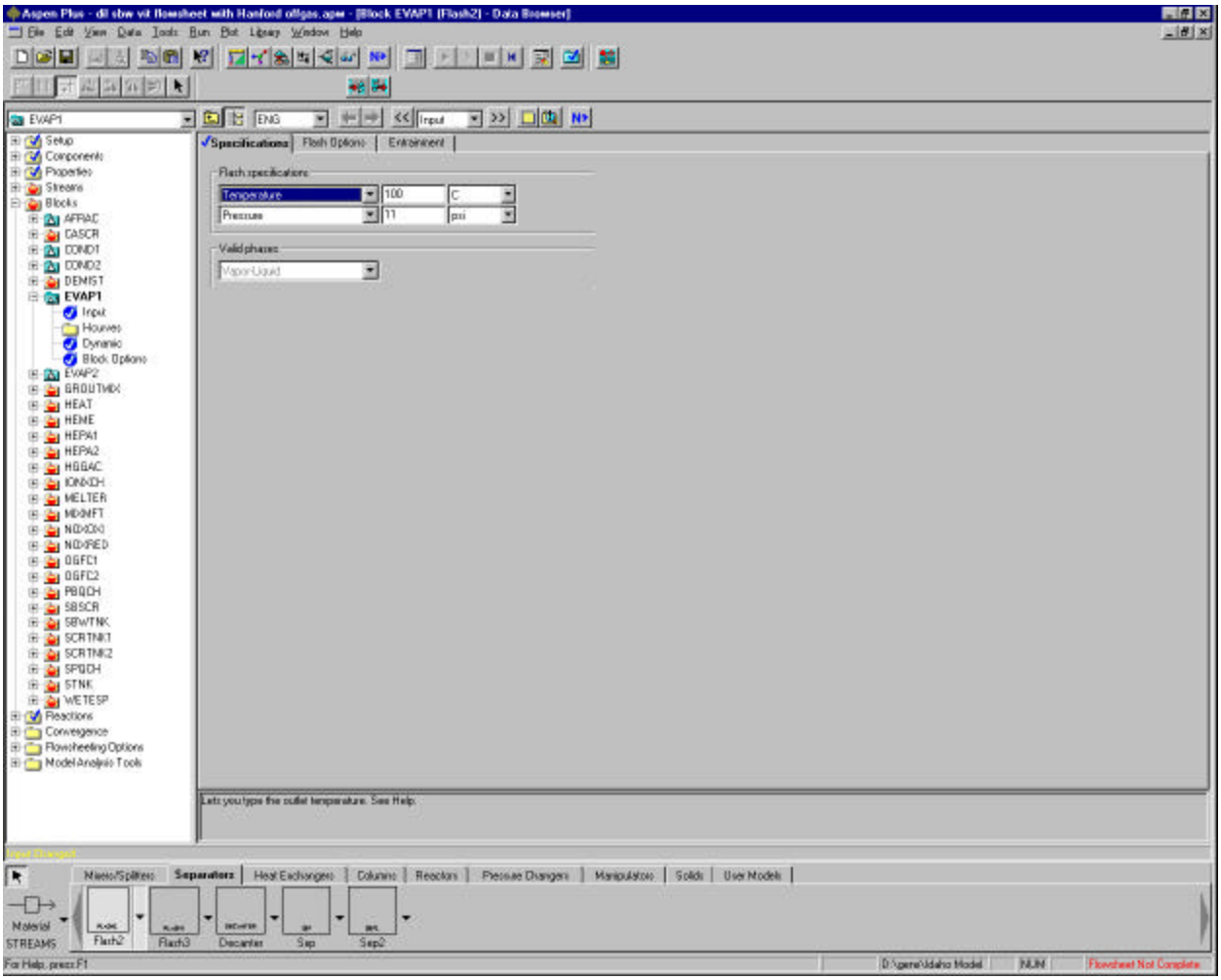

Figure 6. Aspen Plus® GUI for unit operation definition like temperature, pressure, phase

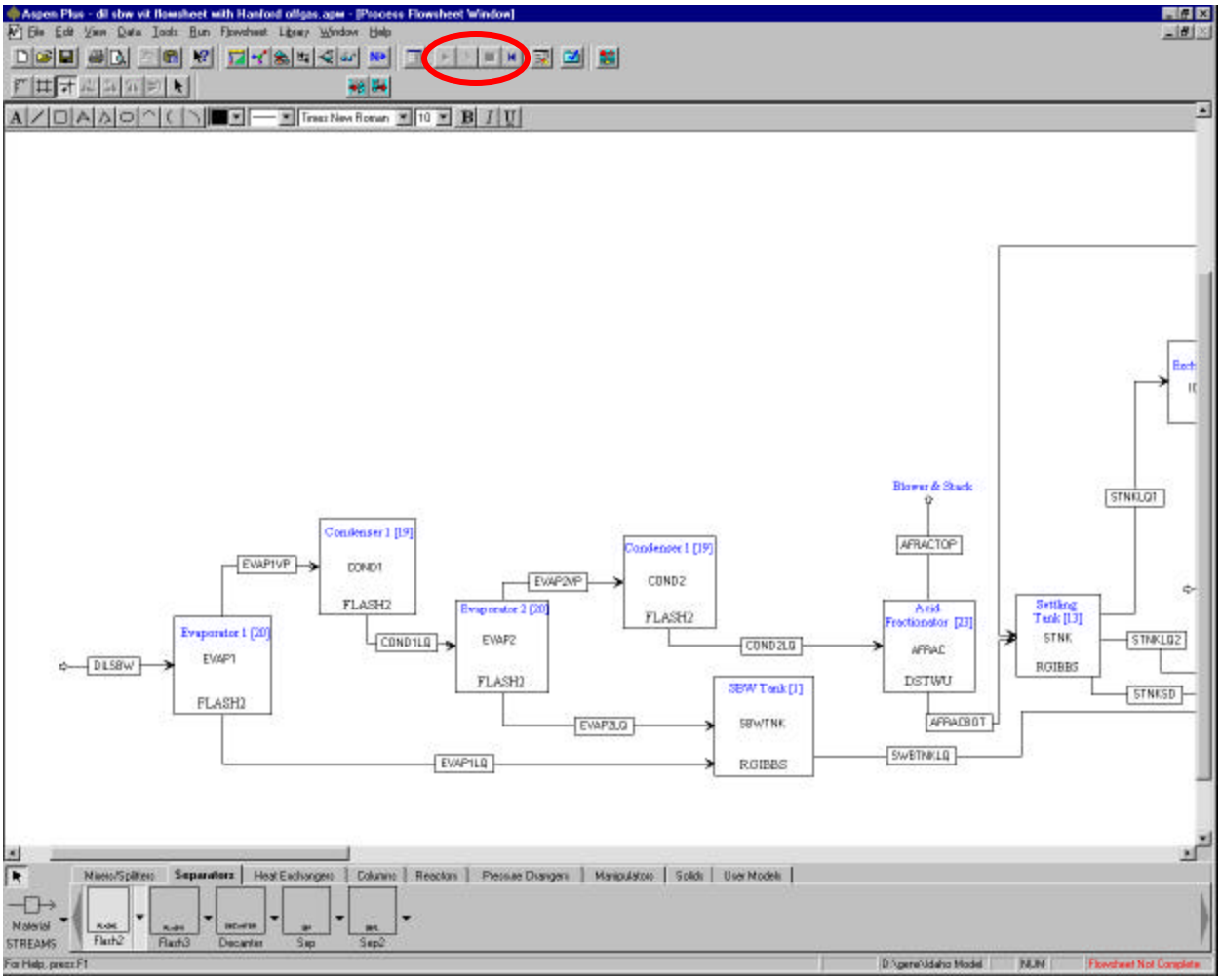

Figure 7. Aspen Plus® GUI for running flowsheet or simulation

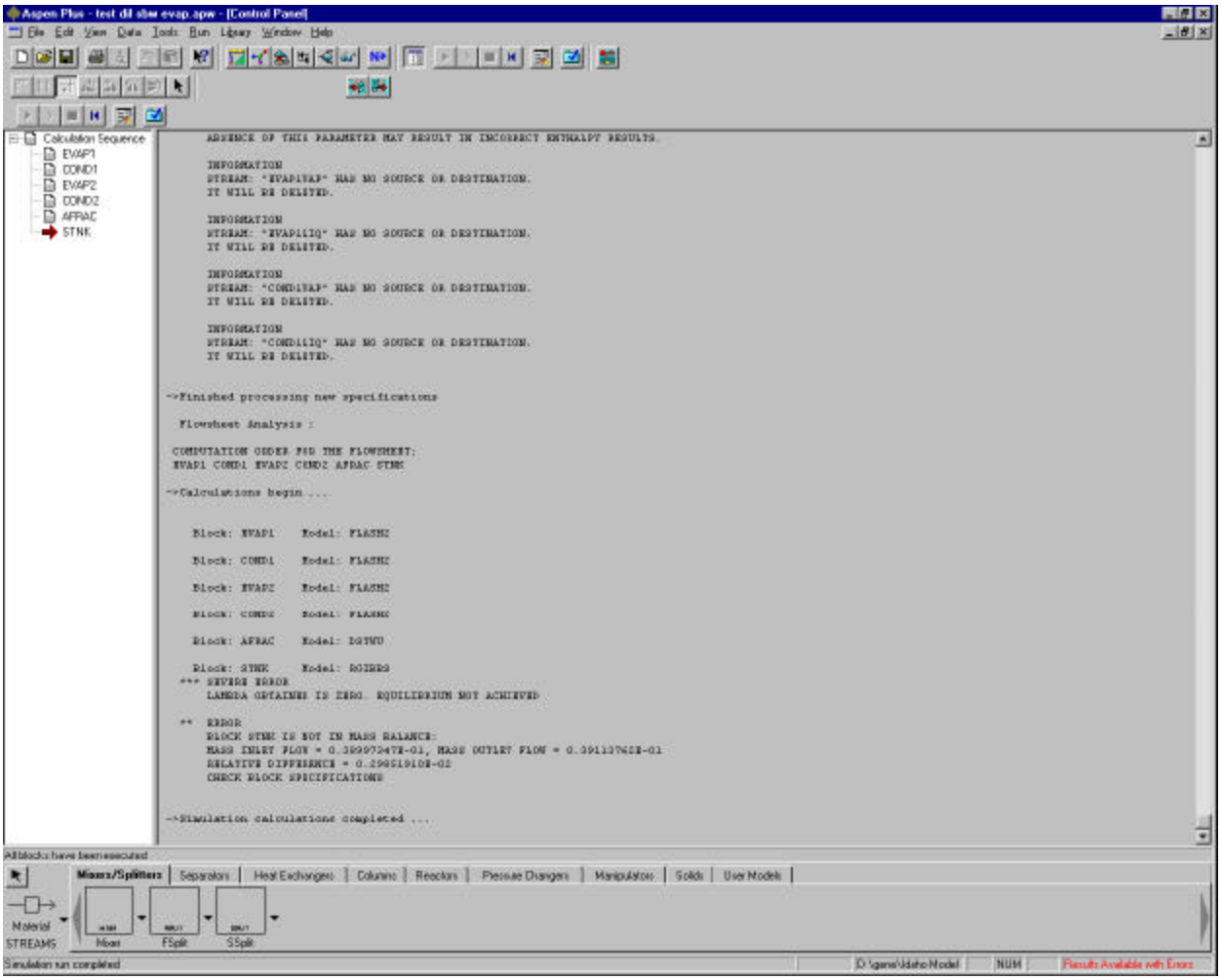

Figure 8. Aspen Plus®GUI for simulation results

2.4 Description of Data Flow

Data is entered into the Idaho flowsheet via the various Aspen Plus® GUI's as defined in the previous section. The user enters various alphanumeric data into the Aspen Plus® GUI's to satisfy the flowsheet requirements to run. This data is saved along with all the flowsheet definitions as well as its current run state when the user saves the flowsheet as shown in Figure 9.

The data out of the flowsheet is in the form of the simulation results that are generated by Aspen Plus®. These run results are available through a "results GUI" described earlier. Each run's results are saved along with the flowsheet and may be reviewed at any time by the user. The user may review the results, export them to another program such as Excel or Word, or generate report files to contain specific results in a special format.

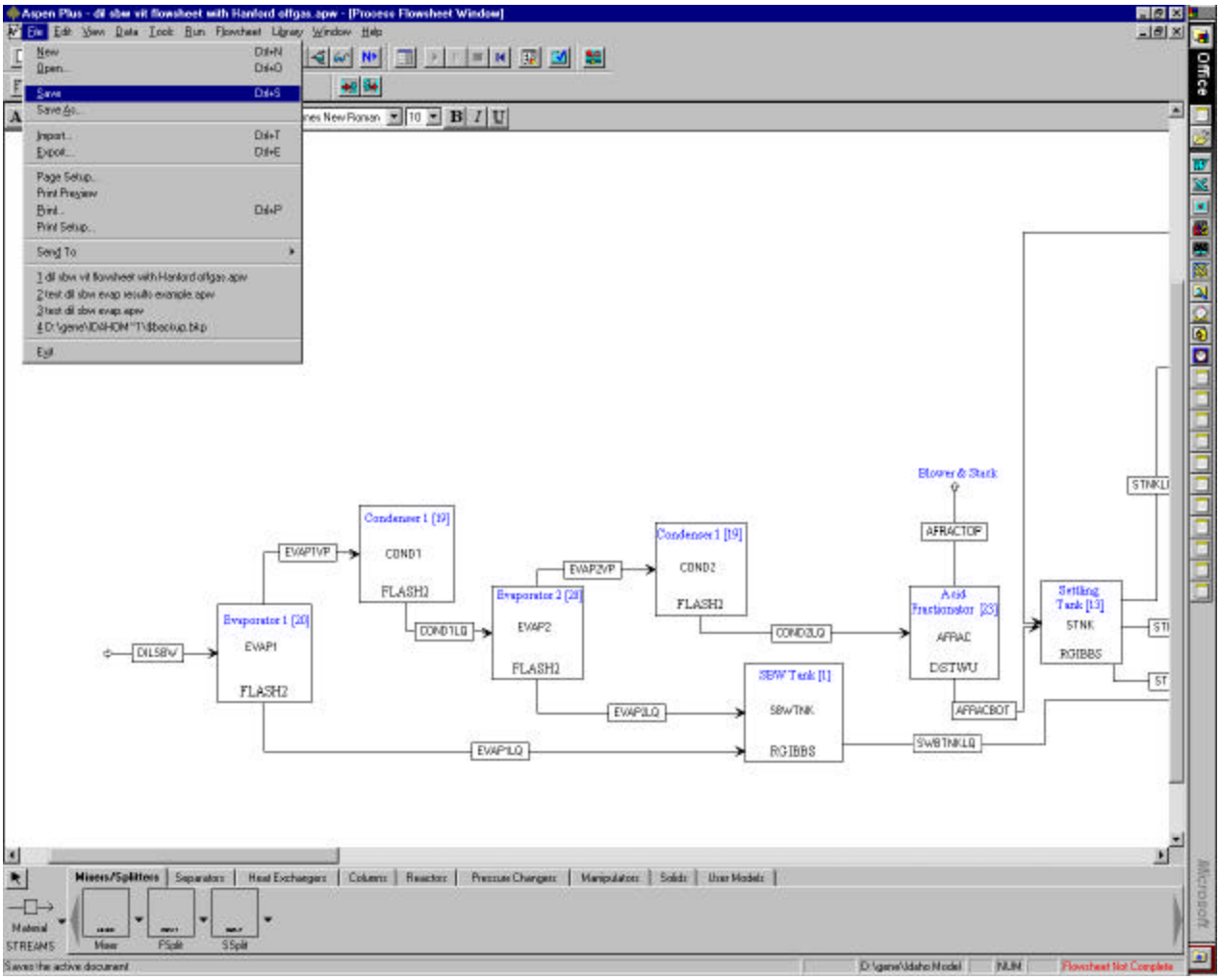

Figure 9. Aspen Plus® GUI for saving flowsheets and associated data

2.5 Description of Data Structure

The structure of the data going into and out of the flowsheet simulation is controlled by Aspen Plus®. As described in the earlier section about how the flowsheet works, alphanumeric values are entered into the appropriate Aspen Plus® GUI's for components, physical property databanks, streams, and unit operations. This data structure is defined internally by Aspen Plus® and is not controlled by the user. The user may save the flowsheet and all its associated data definitions out in a proprietary binary format or the *.apw format. The user may also save just the component, stream, and unit operations block data out in a readable text format or the *.bkp format.

2.6 Description of Numerical Methods

Flowsheets with recycle loops, design specifications, or optimizations must be solved iteratively by Aspen Plus®. Aspen Plus® can determine tear stream selection, convergence methods, and the calculation sequence used to solve the flowsheet automatically. Alternatively, the user can supply part or all of the convergence specifications. Various numerical methods are used in Aspen Plus®. These include standard linear and nonlinear solution techniques like Wegstein, Direct, Secant, Broyden, Newton and SQ methods (Press, 1992) . The use of these numerical methods are entirely within the Aspen Plus® code and no original programming will be done to modify these solution techniques. These methods are maintained and verified through the Aspen Plus® QA program.

2.7 Description of Physical Models

Aspen Plus® includes a number of basic unit operation models that are typically used to represent one or more unit operations found in real processes. These models may be used alone to represent equipment such as pumps, heaters, valves, mixers, etc., or they may be used as generic "tools" to build models of more complex unit operations. Table 1 summarizes the models available.

Table 1 Summary of Unit Operation Models

Basic Unit Operation Models and Stream Manipulators	
Dupl	Copies inlet stream to any number of outlet streams
Flash2	Performs two-phase (vapor-liquid) or three-phase (vapor-liquid-solid) phase equilibrium calculations
Flash3	Performs three-phase (vapor-liquid-liquid) phase equilibrium calculations
FSplit	Splits inlet stream to any number of outlet streams
Heater	Represents heaters, coolers, or mixers with known heat duty or specified temperature
Mixer	Adiabatic mixing of any number of feed streams
Mult	Multiplies stream flow rates by a constant
Pipe	Calculates pressure drop through pipelines
Pump	Represents pumps or liquid standpipes (pressure must be specified)
Distillation and Fractionation Models	
Sep	Mass-balance model for separation operations with any number of product streams
2-Sep	Mass-balance model for separation operations with two product streams
RadFrac	Predictive multistage distillation model
MultiFrac	Predictive model for complex distillation operations with multiple columns
Reactor Models	
RStoic	Mass-balance model based on specified conversion for any number of stoichiometric reactions
RYield	Mass-balance model based on specified product yield for any number of stoichiometric reactions
REquil	Chemical equilibrium calculated from user-specified equilibrium constants
Rgibbs	Chemical equilibrium calculated by Gibbs free-energy minimization
RCSTR	Predictive, reaction rate-based model to simulate continuous stirred tank reactors
RPlug	Predictive, reaction rate-based model to simulate continuous plug-flow reactors
RBatch	Predictive, reaction rate-based model to simulate batch and semi-batch stirred tank reactors

2.8 Description of Process Flow

Process flow has been defined by INEEL in the Process Options Description Document (Nichols *et al*, 2001a). The Process flow diagrams are shown in Figure 10 through Figure 13. Figure 10 shows the vitrification process with a generic block for the melter offgas process. Three offgas process configurations are being considered and will be modeled as part of this flowsheet development task. The three offgas process flows are shown in Figure 11 through Figure 13.

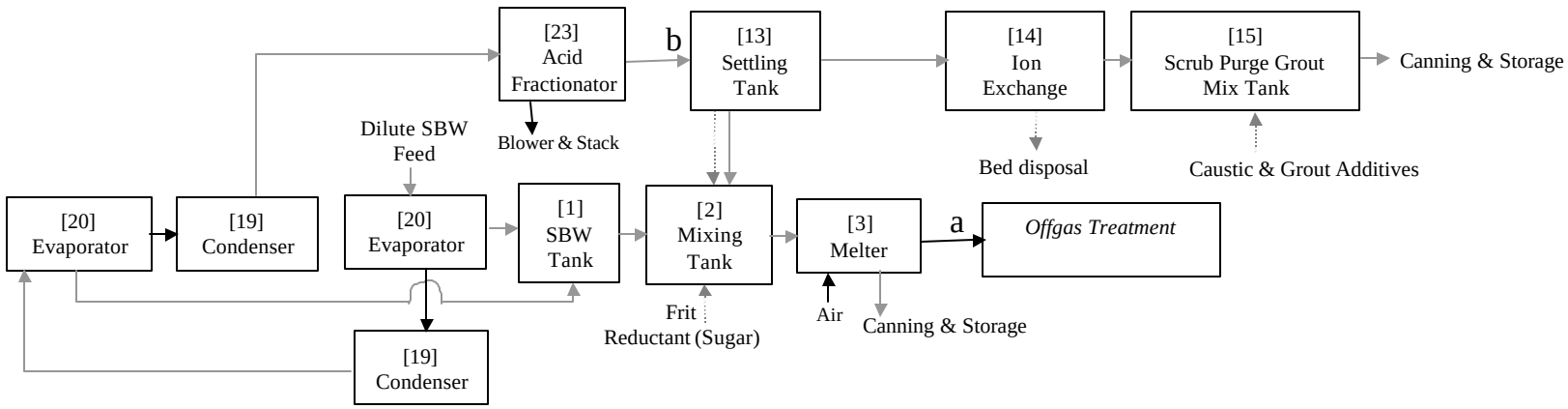

Figure 10. Schematic of INEEL SBW Direct Vitrification Process

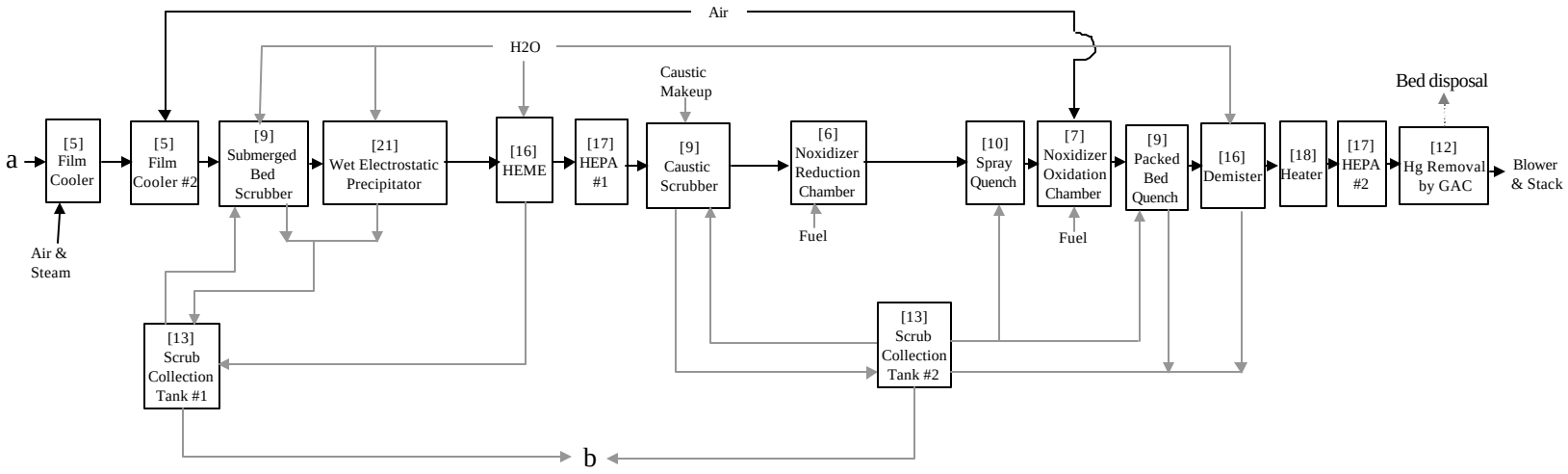

Figure 11. Offgas Configuration Option #1

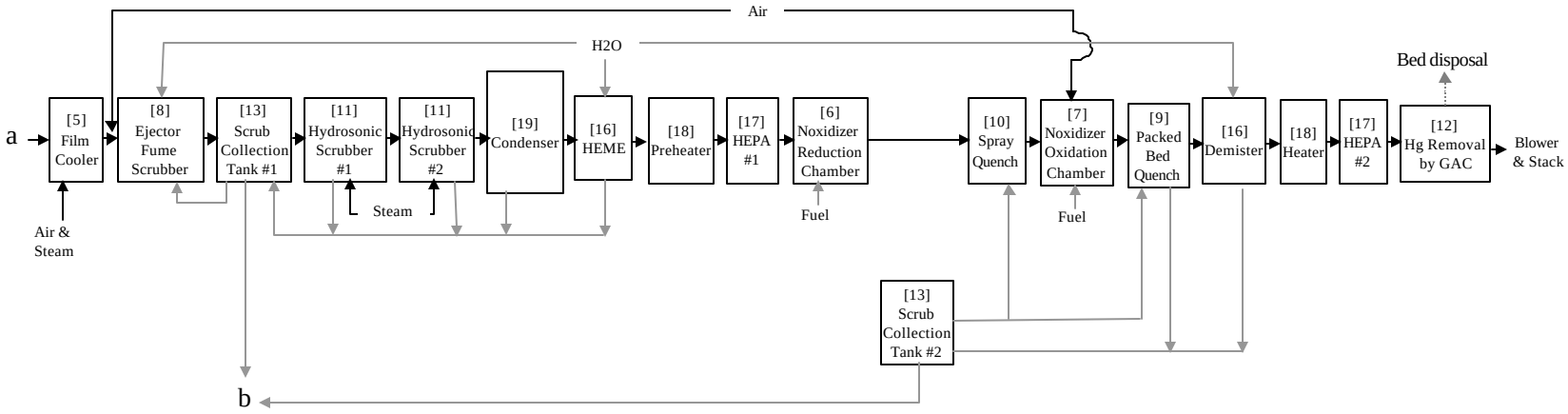

Figure 12. Offgas Configuration Option #2

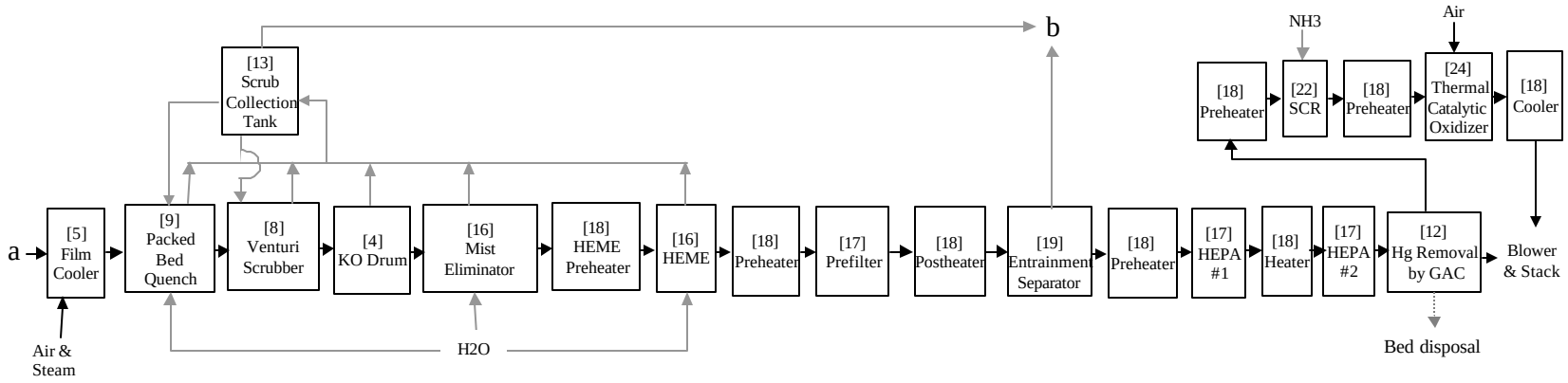

Figure 13. Offgas Configuration Option #3

2.9 Description of Process Structures

Process Structures for the direction vitrification of INEEL SBW have been defined in the Options Description Document (Nichols *et al*., 2001a). This document contains descriptions of unit operations of interest (Table I), phenomena modeling approaches (Table II), representative compositions of dilute SBW feed (Table III), representative compositions in SBW tanks (Table IV), representative gas streams (Table V), and miscellaneous mass balance assumptions (Table VI).

2.10 Description of Relationship Between Data Structures and Process Standards

Aspen Plus® is part of AspenTech's total engineering software suite. AspenTech has been in the process simulation business for more than 20 years and is the leading supplier of integrated software and plant solutions based on Process Engineering and Design, Information Management and Process Control and e-Supply Chain technologies for the process industries. AspenTech software is the corporate standard in 45 of the top 50 Chemical Engineering companies and 18 of the top 20 Refining companies worldwide. Aspen Plus® is used by educators at 550 universities (that is approximately 85% of all engineering schools) worldwide to teach the fundamentals of process engineering, design, development, and optimization.

For these reasons, Aspen Plus®'s internal process standards and data structures are deemed more than satisfactory for the Idaho simulation task. Exact definitions of structures and standards are controlled by AspenTech and may be available for inspection upon request.

3.0 Description of Ranges of Inputs and Outputs

The various ranges of input for the Idaho vitrification flowsheet are described in the Idaho Process Options Description document (Nichols *et al*., 2001a). The Process Options Description Document outlines the desired ranges to operate the various unit blocks in the flowsheet. These operating ranges will be used in the Aspen Plus® flowsheet and are based on design requirements and operational experience. The output from the Idaho flowsheet simulation will depend upon exactly what operational data goes into the Aspen Plus® flowsheet. Since the flowsheet is being developed to test various flowsheet options, exact output ranges are not available. Simplified simulations without thermodynamic rigor are available and their results will be used to make comparisons with the more rigorous results from Aspen Plus®. The Aspen Plus® flowsheet is expected to provide material and energy balance information for the proposed flowsheet design.

The options description document also describes the composition of the various feed streams into the Aspen Plus® flowsheet. These compositions will vary some depending on which waste tank is being processed. However, a general or representative composition will be used for the Aspen Plus® flowsheet. The component list in Aspen Plus® may be updated as needed during the course of the project.

4.0 Description of How to Convert Design into Code

The various flowsheet options for the Idaho vitrification process have been described in Figure 1 of the Idaho Process Options Description document (INEEL/EXT-2001-173). This Figure 1 is discussed in an earlier section of this document. Following this figure, three flowsheets have been constructed in Aspen Plus® to try to match the desired unit operations along with any physical constraints and phenomena.

The first part of the Idaho Vitrification flowsheet consists of the feed and melter systems. The Aspen Plus® version of this part of the flowsheet is shown in Figure 14 and Figure 15. Note that due to the size of the printed flowsheet it has been broken across two pages. The break point is done for easy reference but may not be aesthetically pleasing. The names of unit blocks as described in the Process Options Description document are shown in the flowsheet at the top of each Aspen Plus® block (shaded font). Following the conventions and structure of Aspen Plus®, each block is given an 8 or less character name which is shown in the middle of each Aspen Plus® block (different typeface). Due to the 8-character limitation, abbreviations are made to try to capture as much of the true name of the operation as possible. At the bottom of each block in the Aspen Plus® flowsheet is the Aspen Plus® unit operation name or the Aspen Plus® model that is being used. Note that Aspen Plus® uses block names and model names that are all caps. The Aspen Plus® models were chosen to as closely mimic the true physical operation as possible.

The material streams that go into each Aspen Plus® unit block are also limited to 8-characters. Where possible, the initial part of the Aspen block name is used as the stream name prefix with a suffix that reflects the major phase or state of the stream. For example, in Figure 14, the dilute sodium bearing waste feed stream to evaporator 1 is named DILSBW. The vapor stream off evaporator 1 is EVAP1VP where VP is for vapor and the liquid stream off evaporator 1 is EVAP1LQ. Note that Aspen Plus® uses stream names that are all caps. Other stream name suffixes used throughout the Aspen flowsheet are WAT for water, STM for stream, R for recycle, SD for solids, and LQS for liquid/solids mix. This nomenclature sometimes has to be superceded because of the 8-character name limit.

For the first section of the flowsheet (as shown in Figure 14 and Figure 15), the FLASH2 Aspen Plus® model is used to simulate evaporators/condensers and the RGIBBS model is used to calculate phase equilibrium among solids, liquids, and vapors as needed. The Aspen Plus® DSTWU unit or simple short-cut distillation model is used to model the acid fractionator and the Aspen Plus® SEP or separator model is used for the ion exchange column. The mixing tank and grout mixer are modeled by the Aspen Plus® MIXER model. The settling tank is modeled using the Aspen Plus® RGIBBS model since it can handle simultaneous solid, liquid, and vapor reactions. The melter is also modeled by RGIBBS. These choices may be replaced by black boxes or empirically based models depending on whether the Aspen Plus® flowsheet can converge using its standard library models. The rest of the Idaho Vitrification flowsheet is different depending on which offgas treatment train is used.

The first offgas treatment option to be modeled is based on Hanford's proposed offgas treatment and is shown in Figure 16 through Figure 19. Note that the flowsheet is broken over several pages for readability. Again the Aspen Plus® RGIBBS model will be used to simulate multi-phase reactions like in the offgas film coolers, the scrub collection tanks, the Noxidizer reduction/oxidation chambers, and the Hg removal in the GAC column. If convergence is a problem then a simpler Aspen reactor model like RStoic or Ryield may be used in conjunction with a simple separator model (SEP). The RADFRAC Aspen model can handle all types of multistage vapor-liquid fractionation operations including ordinary distillation, absorption, and stripping. The Aspen Plus® RADFRAC model will be used to try to simulate the submerged bed scrubber, HEME, Demister, and caustic scrubber. If convergence of any of the RADFRAC models becomes a problem then simple separator and reactor models can be used. The wet electrostatic precipitator is modeled by the Aspen ESP model for dry electrostatic precipitators. If the ESP model does not converge then a simple separator (SEP) and reactor (Rstoic) model can be used. The HEPA is modeled using the Aspen Plus® FABFL or fabric filter model used to separate an inlet gas stream containing solids into a solids stream and a gas stream carrying the residual solids. If the FABFL does not converge then a simple separator model can be used. The heater will be modeled by the Aspen Plus® HEATER model.

The second offgas treatment option to be modeled is based on SRS's offgas treatment and is shown in Figure 20 through Figure 23. Note that the flowsheet is broken over several pages for readability. As is done in the Hanford offgas train, the Aspen Plus® RGIBBS model is used to simulate multi-phase reactions like in the offgas film coolers, the scrub collection tanks, the Noxidizer reduction/oxidation chambers, and the Hg removal in the GAC. If convergence is a problem then a simpler Aspen reactor model like RStoic or Ryield may be used in conjunction with a simple separator model (SEP). As stated earlier the RADFRAC Aspen model can handle all types of multistage vapor-liquid fractionation including distillation, absorption, and stripping. The Aspen Plus® RADFRAC model will be used to try to simulate the hydrosonic scrubbers, HEME, spray quench, packed bed quench, and Demister. If convergence of any of the RADFRAC models becomes a problem then a simple separator and reactor model can be used. As in the Hanford offgas train the HEPA is modeled using the Aspen Plus FABFL or fabric filter model. If the FABFL model does not converge then a simple separator model can be used. In addition to what was in the Hanford train, the SRS train includes an ejector fume scrubber which will be simulated in Aspen by VSCRUB or the venturi scrubber model. The VSCRUB model simulates the removal of solid particles from a gas stream by direct contact with an atomized liquid stream. An Aspen Plus® MIXER model is used to mix the water and scrubber tank recycle streams before going into the ejector fume scrubber since the VSCRUB model cannot handle multiple feed streams. Heaters and preheaters in the SRS train are simulated by the Aspen HEATER model.

The third offgas treatment option to be modeled is based on West Valley's offgas treatment and is shown in Figure 24 through Figure 27. Note that the flowsheet is broken over several pages for readability. As is done in the previous offgas trains, the Aspen Plus® RGIBBS model is used to simulate multi-phase reactions like in the offgas film cooler, the scrub collection tank, the thermal catalytic oxidizer, selective catalytic reduction, and the Hg

removal in the GAC. If convergence is a problem then a simpler Aspen reactor model like RStoic or Ryield may be used in conjunction with a simple separator model (SEP). As stated earlier, the RADFRAC Aspen model can handle all types of multistage vapor-liquid fractionation including distillation, absorption, and stripping. The Aspen Plus® RADFRAC model will be used to try to simulate the HEME, packed bed quench, and mist eliminator. If convergence of any of the RADFRAC models becomes a problem then a simple separator and reactor model can be used. Like in the prior offgas trains, the HEPA is modeled using the Aspen Plus® FABFL or fabric filter model. If the FABFL does not converge then a simple separator model can be used. The West Valley train also includes a venturi scrubber which will be simulated in Aspen by VSCRUB or the venturi scrubber model. The knock out drum and entrainment separator will be modeled by the Aspen FLASH2 model. There are some heaters, coolers, and preheaters in the train that will be simulated by the Aspen HEATER model.

An initial attempt will be made to simulate all three offgas trains using Aspen's unit operation models. Should any of the initial choices fail to converge or mimic the desired physical responses then simpler unit operations will be used. If the simpler unit operations still fail to converge then black boxes will be used. This graded approach is also documented in the Idaho Options Description Document. AspenTech's technical assistance will be employed as needed.

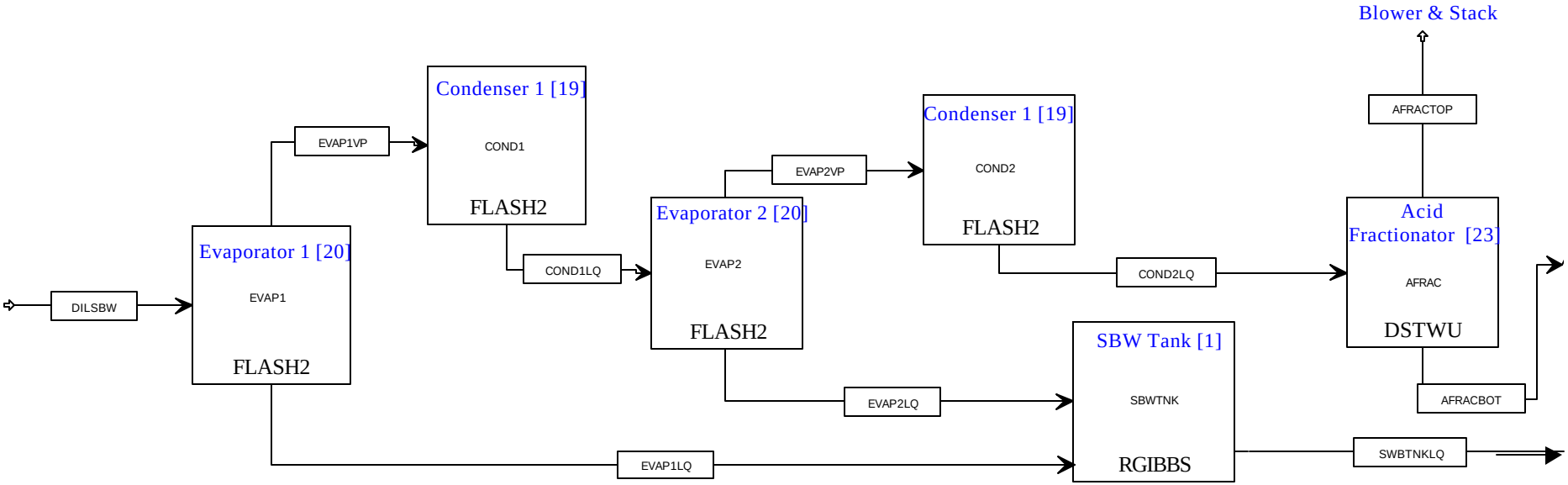

Figure 14. Idaho Vitrification Flowsheet Feed & Melter Section Part 1

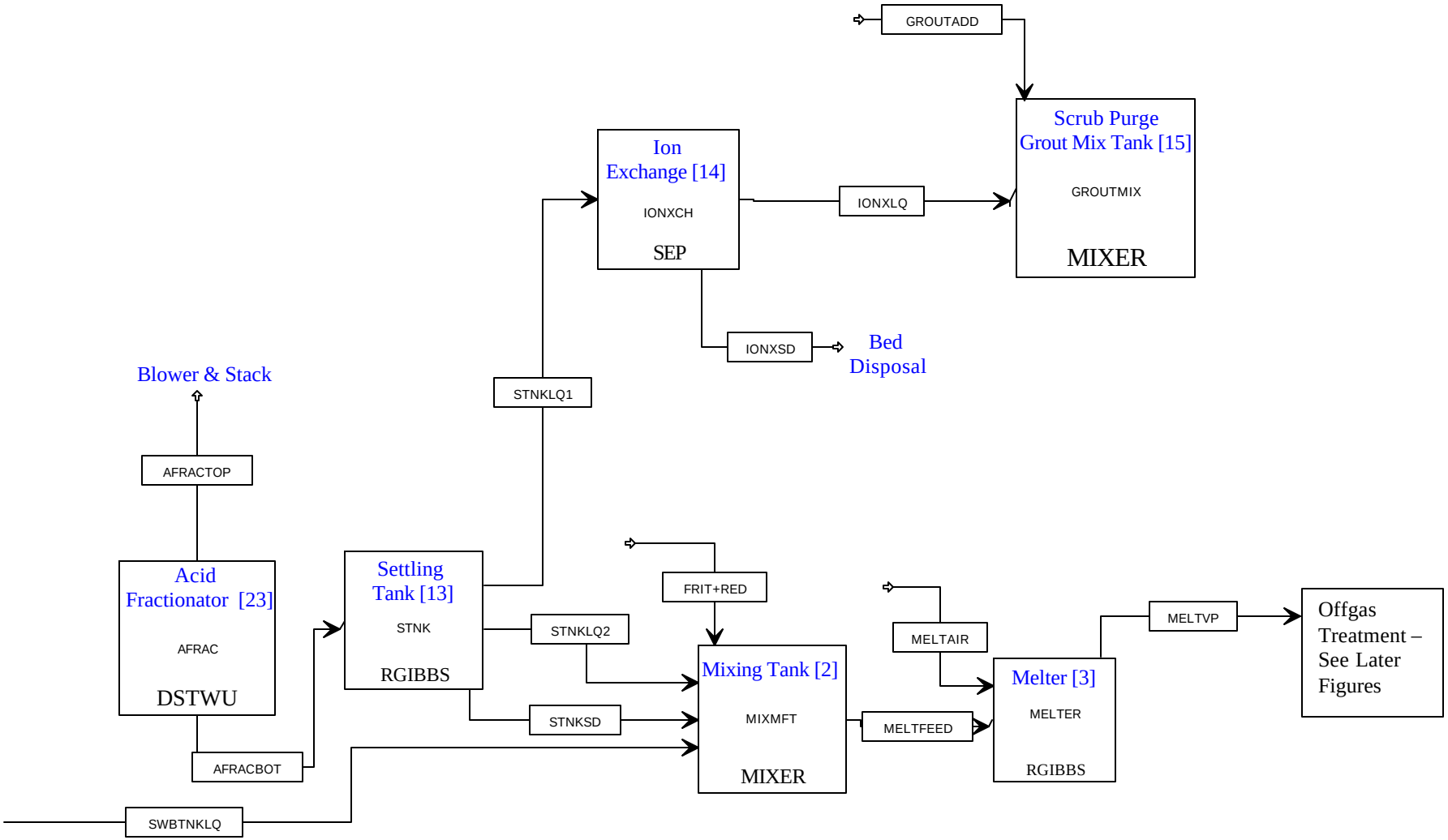

Figure 15. Idaho Vitrification Flowsheet Feed & Melter Section Part 2

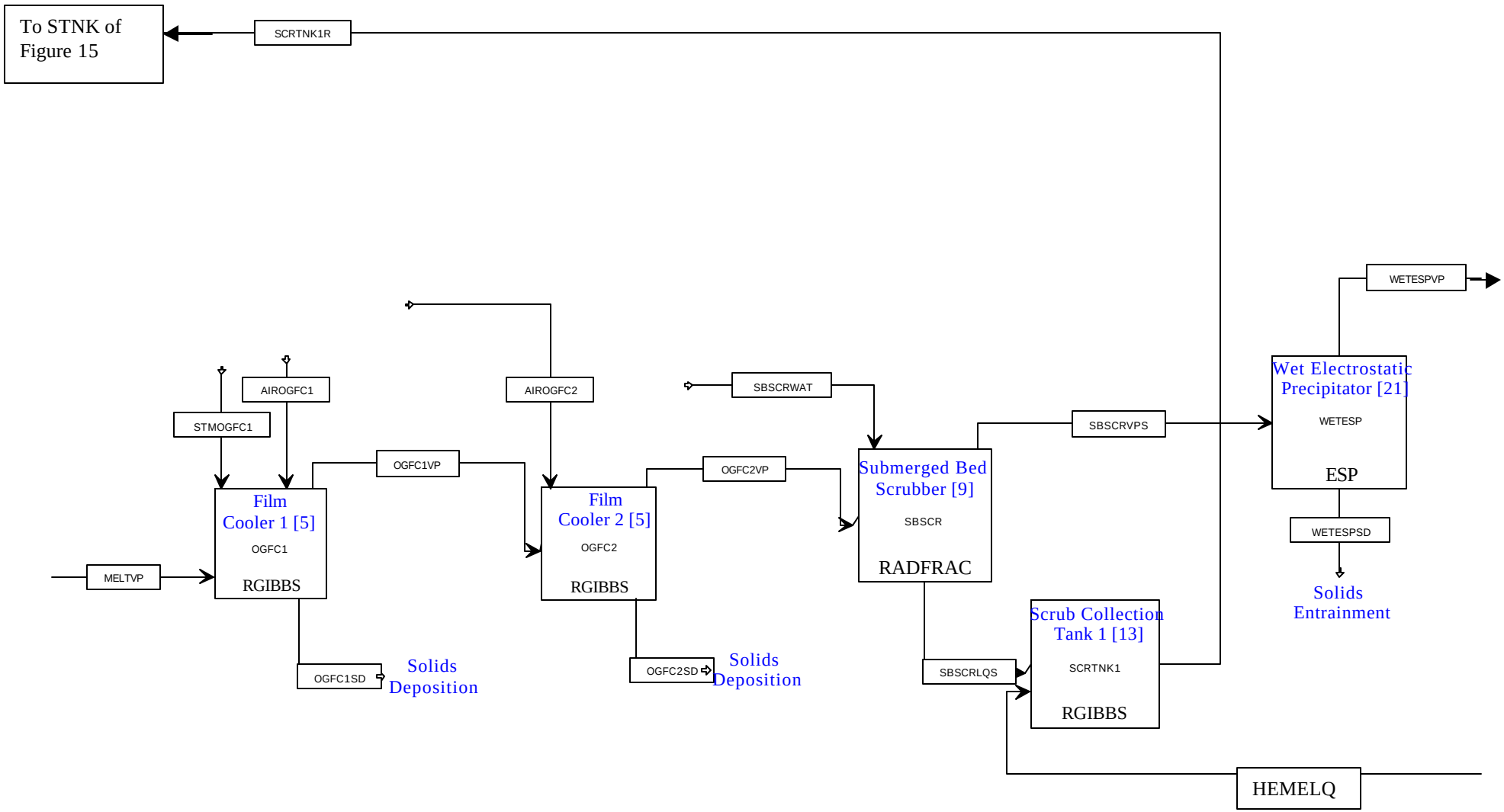

Figure 16. Idaho Vitrification Flowsheet Offgas Treatment 1 (Hanford) Part 1

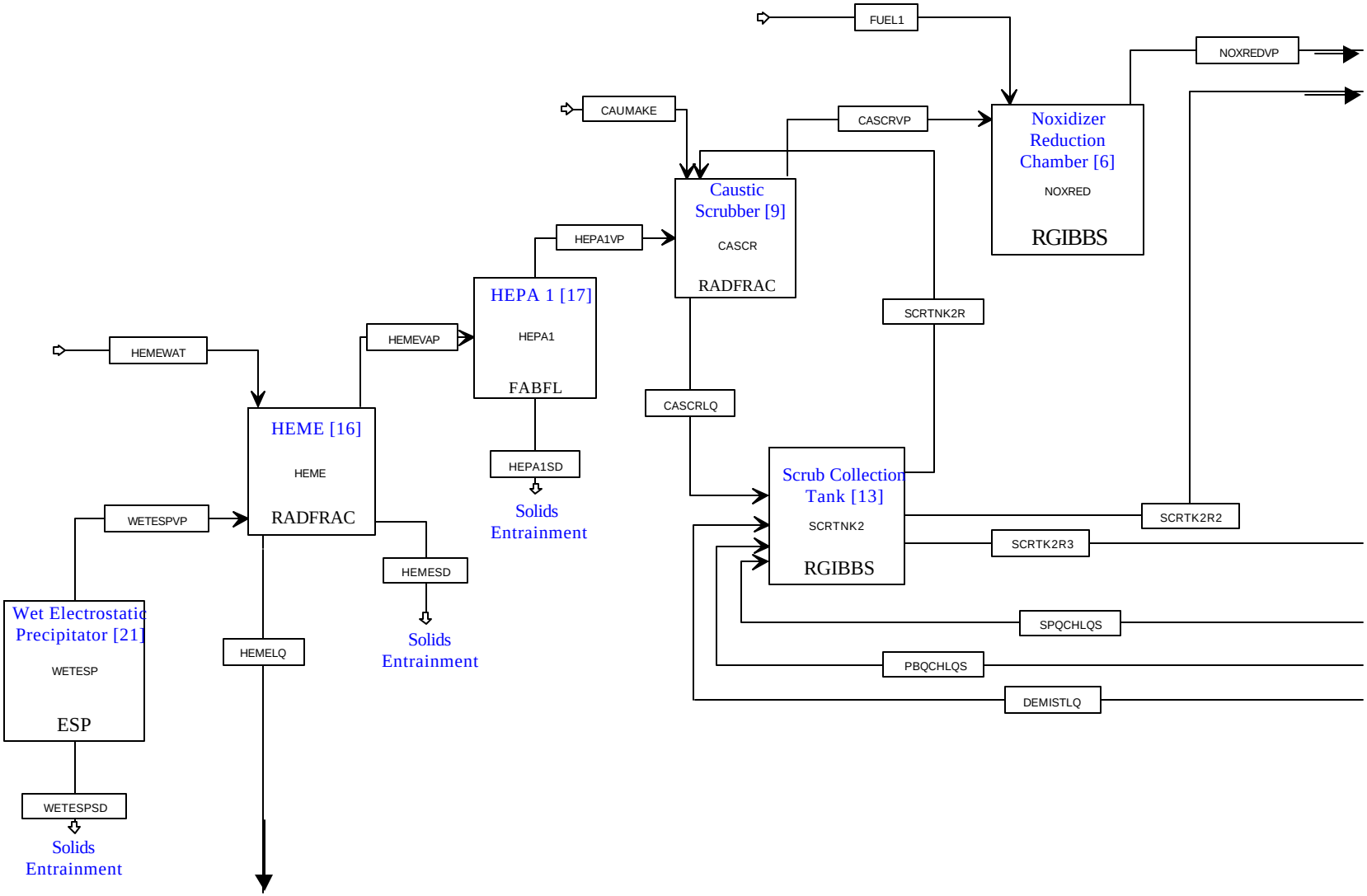

Figure 17. Idaho Vitrification Flowsheet Offgas Treatment 1 (Hanford) Part 2

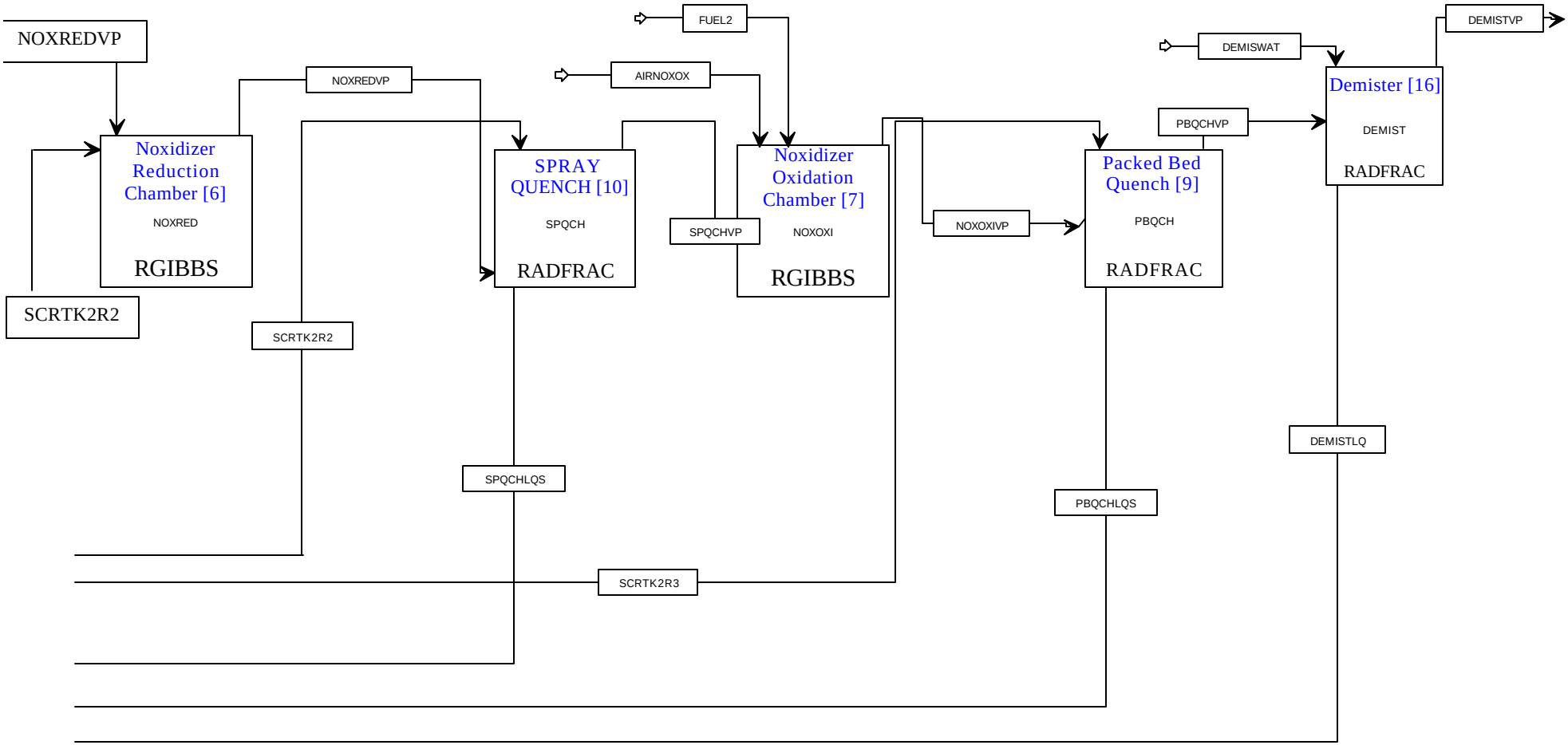

Figure 18. Idaho Vitrification Flowsheet Offgas Treatment 1 (Hanford) Part 3

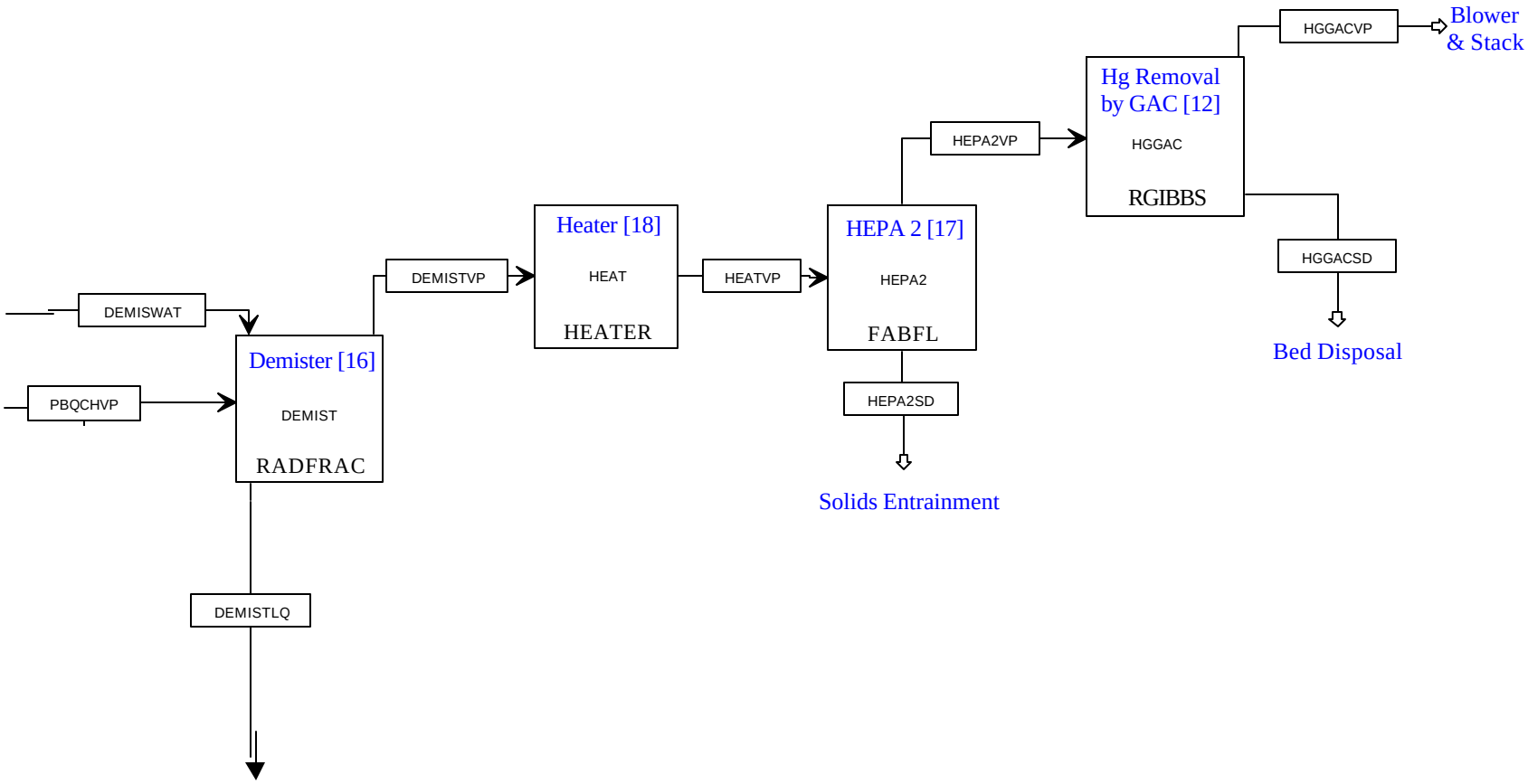

Figure 19. Idaho Vitrification Flowsheet Offgas Treatment 1 (Hanford) Part 4

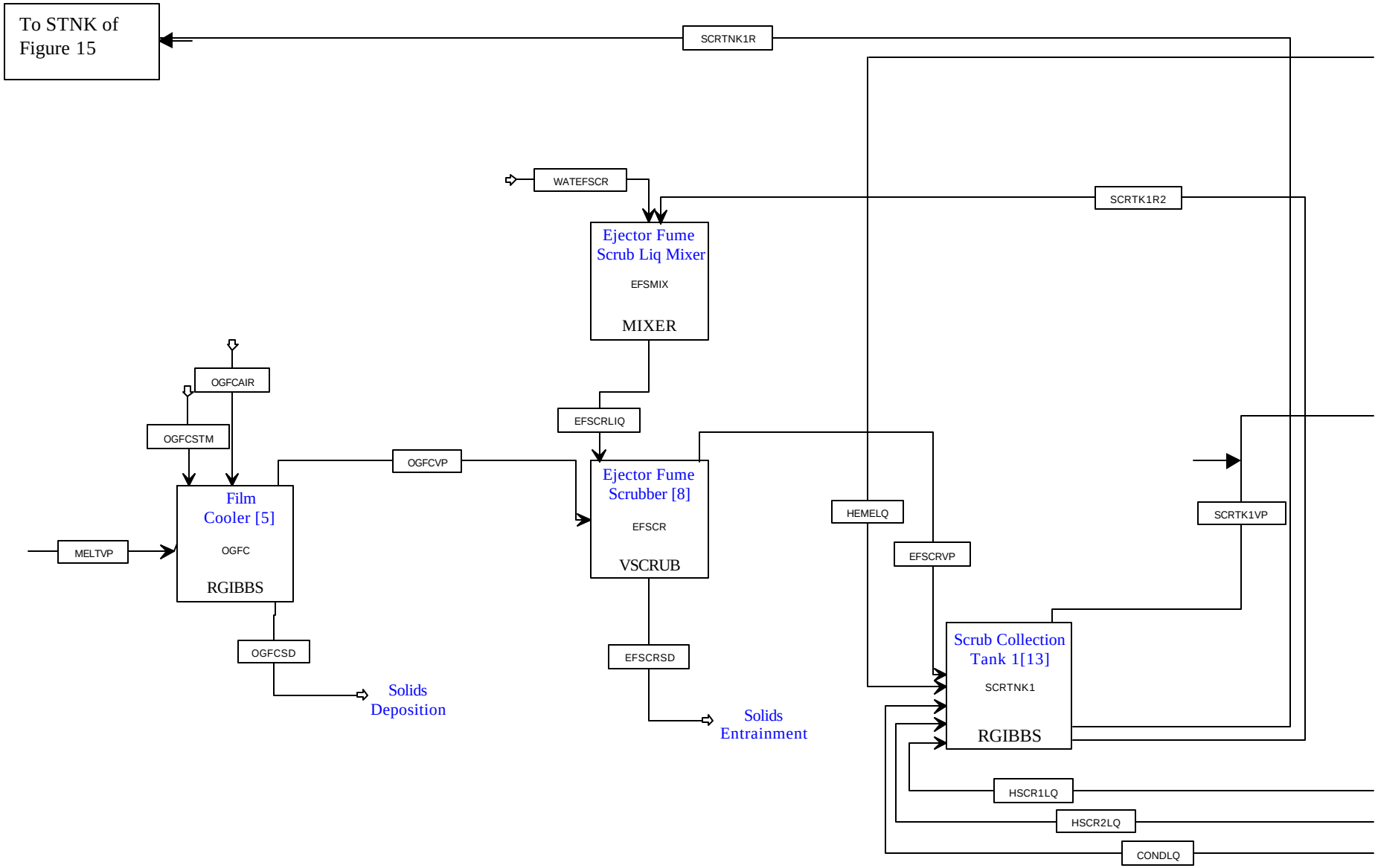

Figure 20. Idaho Vitrification Flowsheet Offgas Treatment 2 (SRS) Part 1

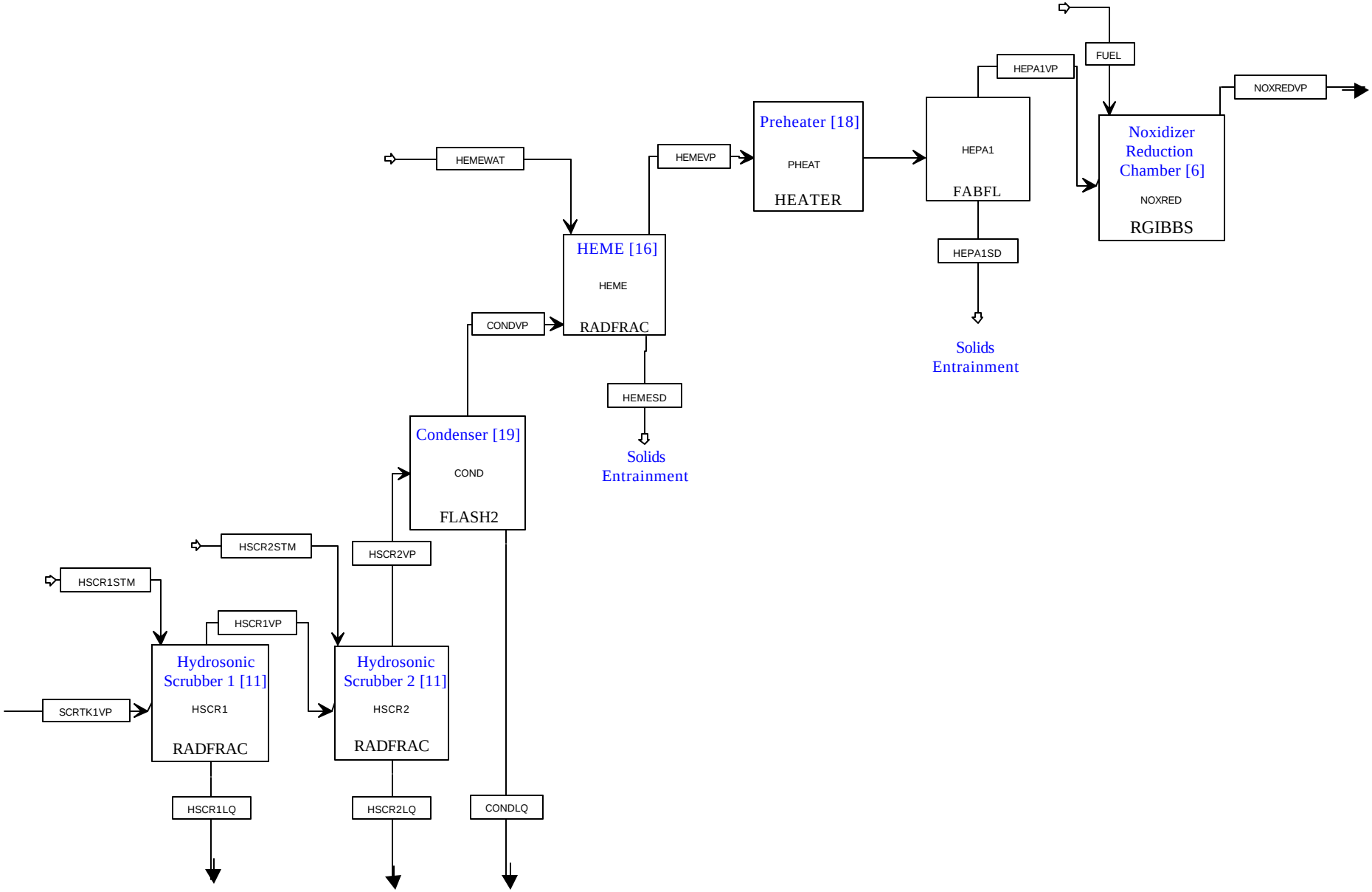

Figure 21. Idaho Vitrification Flowsheet Offgas Treatment 2 (SRS) Part 2

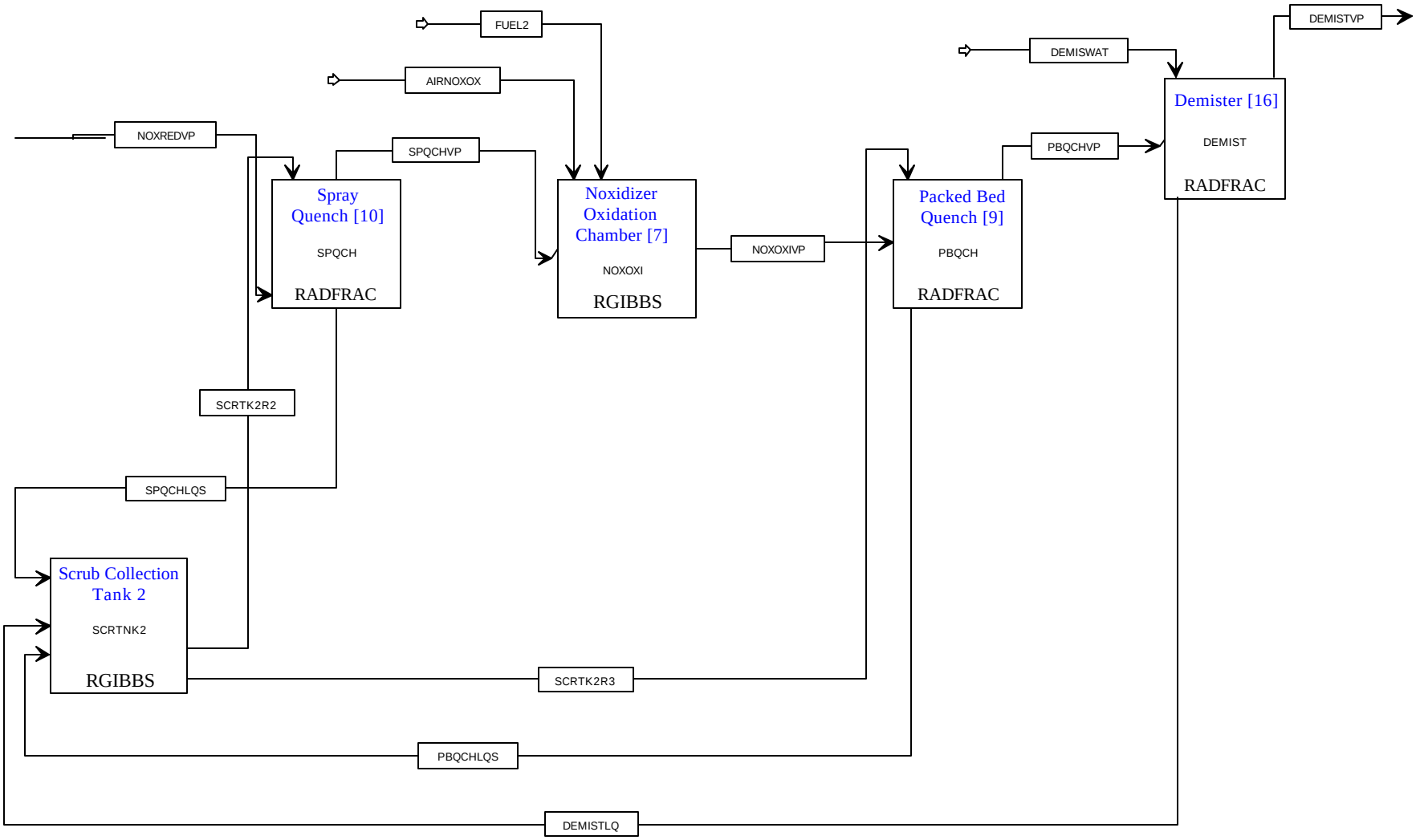

Figure 22. Idaho Vitrification Flowsheet Offgas Treatment 2 (SRS) Part 3

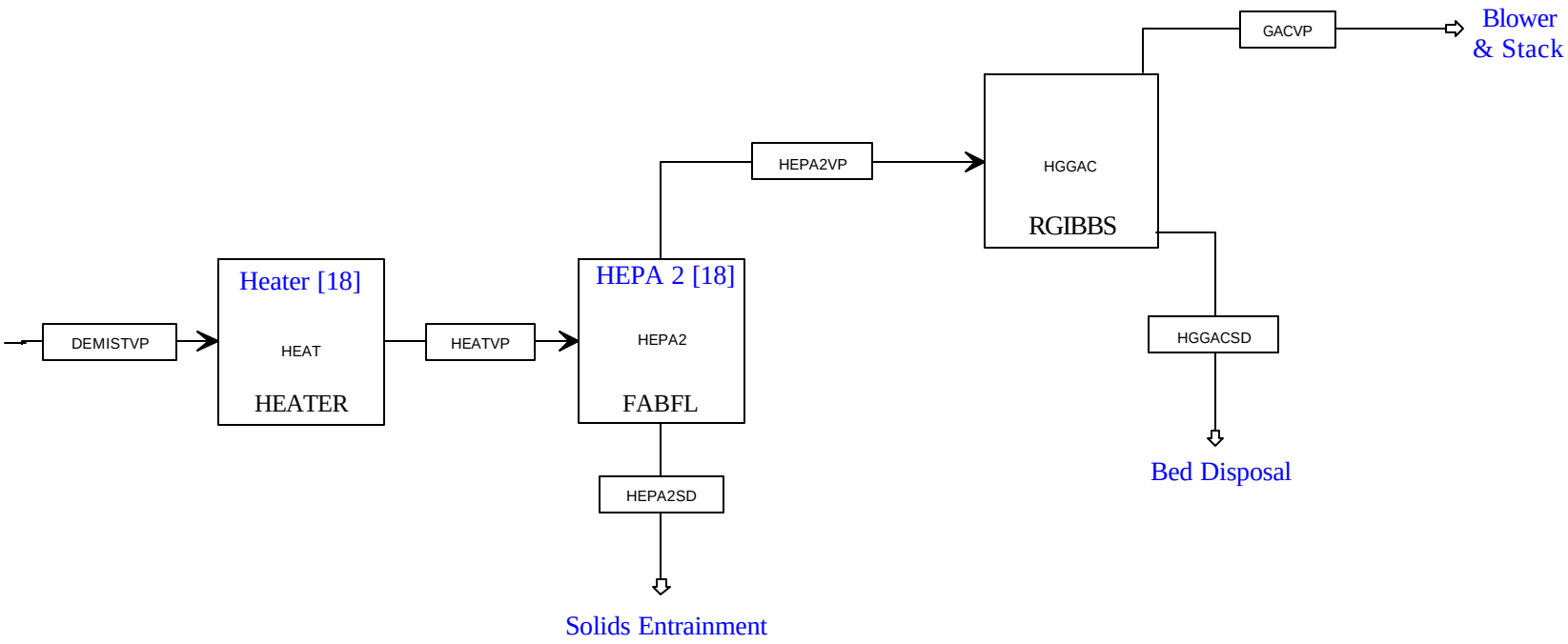

Figure 23. Idaho Vitrification Flowsheet Offgas Treatment 2 (SRS) Part 4

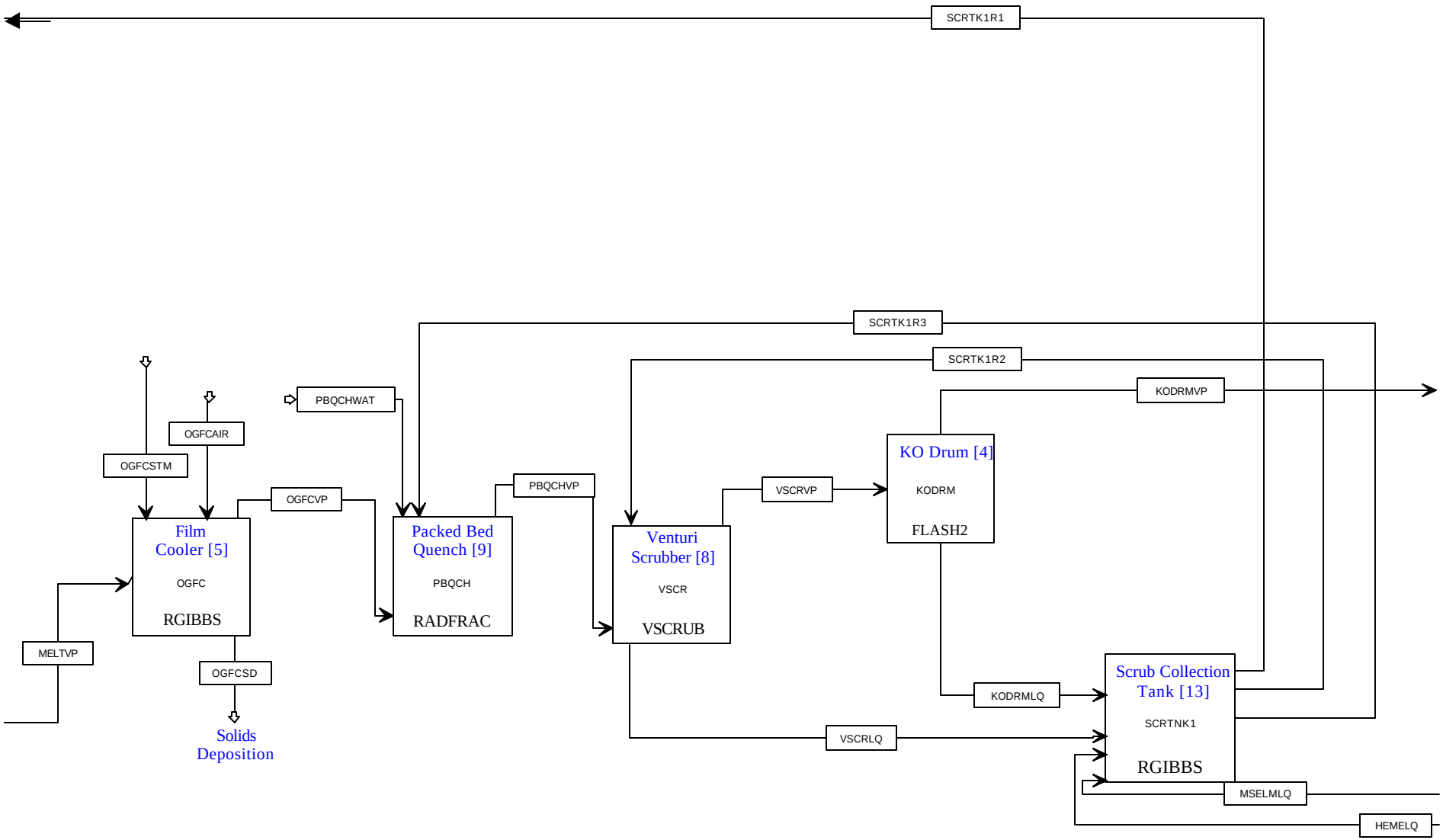

Figure 24. Idaho Vitrification Flowsheet Offgas Treatment 3 (West Valley) Part 1

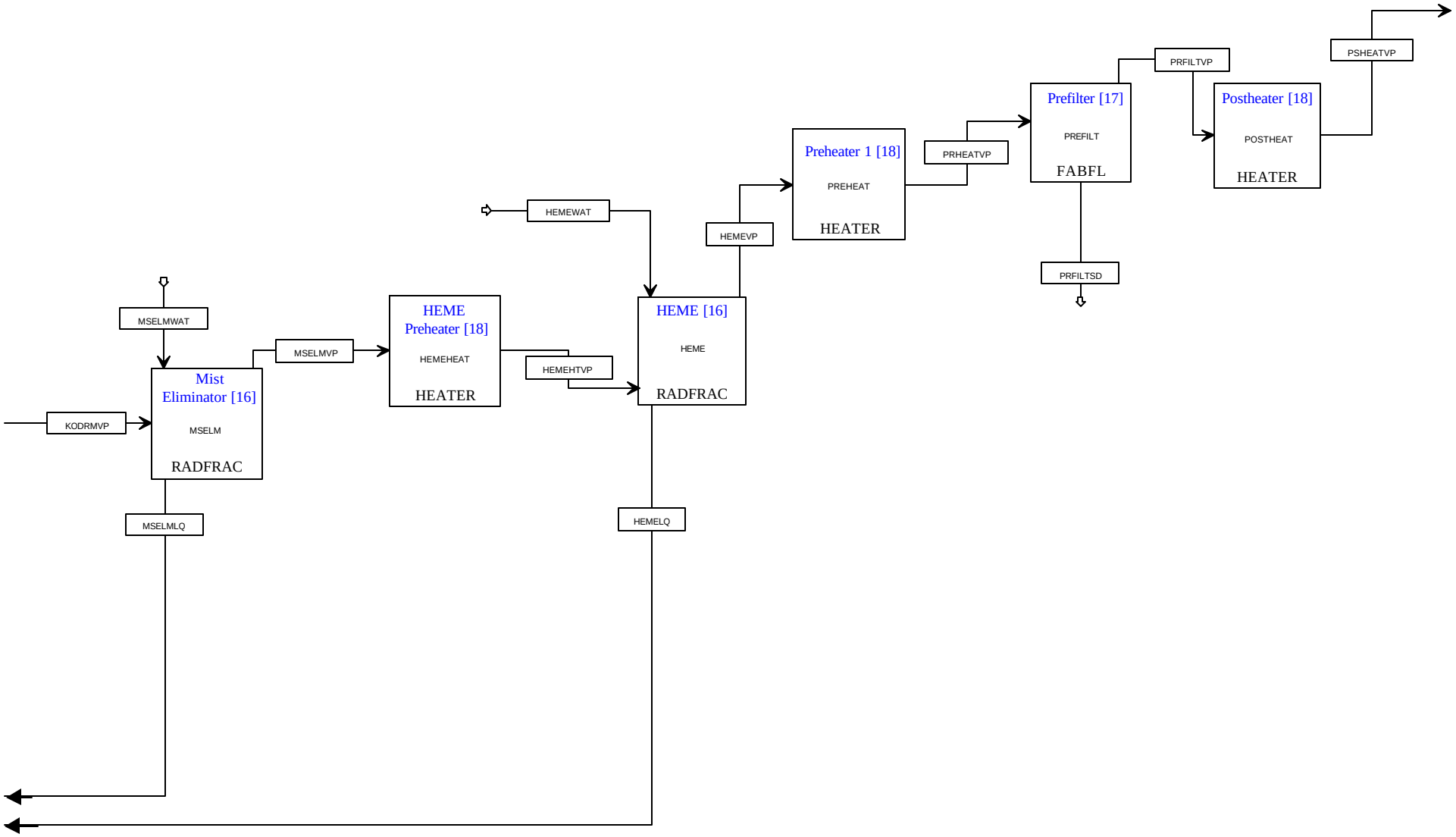

Figure 25. Idaho Vitrification Flowsheet Offgas Treatment 3 (West Valley) Part 2

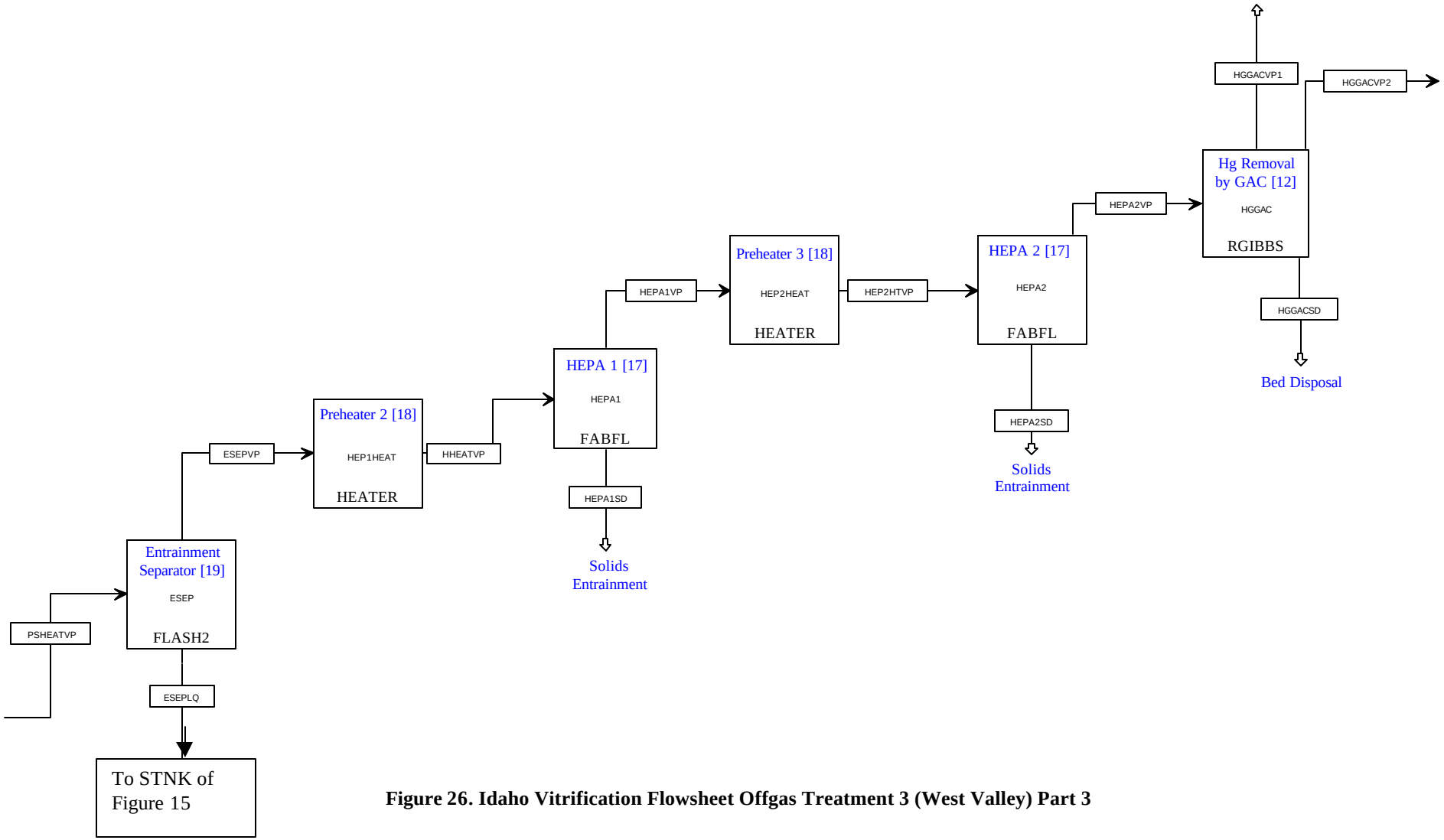

Figure 26. Idaho Vitrification Flowsheet Offgas Treatment 3 (West Valley) Part 3

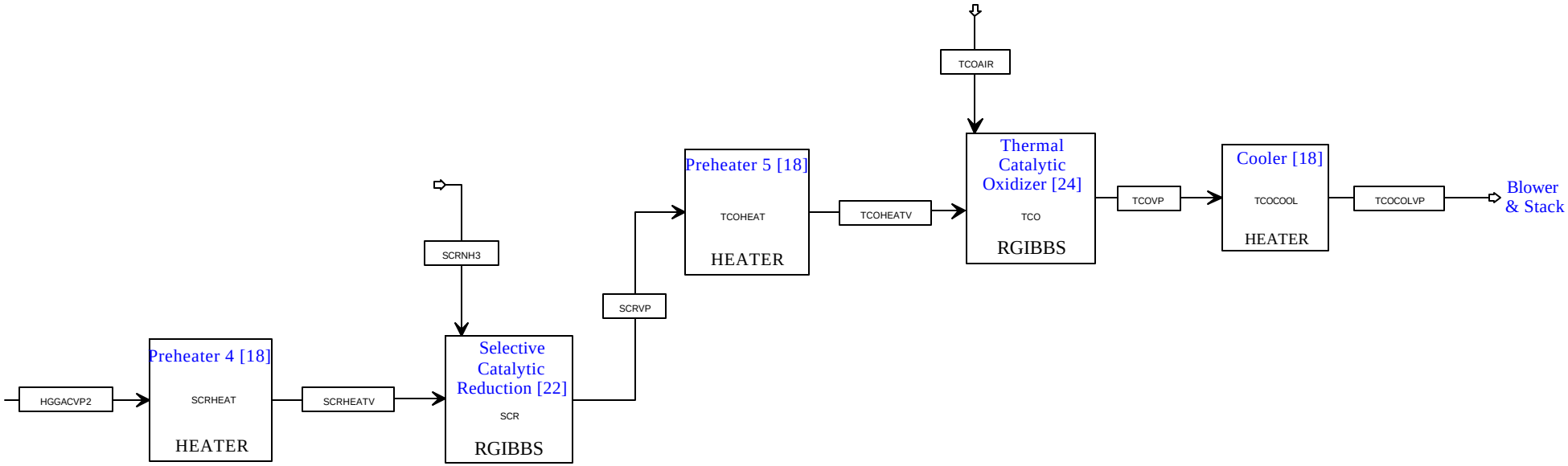

Figure 27. Idaho Vitrification Flowsheet Offgas Treatment 3 (West Valley) Part 4

5.0 Description of Approach for Test Activities

The testing phase of the flowsheet development is defined in the Software QA Plan (Hutson and Daniel, 2001). During the test phase, the software will be validated by executing test cases. A failure to successfully execute the test cases will be reviewed to determine if modification of the requirements, the design, the implementation, or the test plans or test cases are required. The testing will demonstrate the capability of the software to produce valid results for test cases encompassing the range of usage defined by the program documentation. Such activities shall ensure that the software adequately and correctly performs all intended functions.
The tests will be designed to demonstrate, as appropriate, that the computer program properly handles abnormal conditions and events as well as credible failures. The testing will also show that the model does not perform adverse unintended functions and that it does not degrade the system either by itself, or in combination with other functions or configuration items.

Acceptable methods for evaluating the adequacy of the software test case results include: (1) analysis with computer assistance, (2) comparison with other validated computer program(s), (3) comparison with experimental results, (4) use of standard problems with known results, and (5) comparison with confirmed published data and/or correlations.

The testing phase documentation will include test procedures or plans and the results of the execution of test cases. The test results documentation will demonstrate successful completion of all test cases or the resolution of unsuccessful test cases and provide direct traceabilty between the test results and specified software requirements. Additionally, the Savannah River Technology Center will ensure that a technical review of the test procedures/plans and test results is performed. The technical review of the test results will ensure that the test requirements have been satisfied.

6.0 References

AspenTech; "Introduction to Aspen Plus® Version 10.2", Training Course Notes, July 2000.

Hutson, N. D.; Daniel, W. G.; "Software QA Plan for INEEL Vitrification Flowsheet Modeling", U. S. DOE Report WSRC-RP-2001-00207, Rev. 0; Savannah River Technology Center, Aiken, SC (2001a).

Hutson, N. D.; Daniel, W. G.; "Software Requirements Specification for INEEL Vitrification Flowsheet Modeling", U. S. DOE Report WSRC-RP-2001-00208, Rev. 0; Savannah River Technology Center, Aiken, SC (2001b).

Nichols, T. T.; Taylor, D. D.; Lauerhass, L.; Barnes, C. M.; "Process Options Description for Vitrification Flowsheet Model of INEEL Sodium Bearing Waste", U. S. DOE Report INEEL/EXT-2001-173, Rev. 0; Idaho National Engineering and Environmental Laboratory, Idaho Falls, ID (2001a).

Nichols, T. T.; Taylor, D. D.; Lauerhass, L.; Barnes, C. M.; "Selection of Steady-State Process Simulation Software to Optimize Treatment of Radioactive and Hazardous Waste", U. S. DOE Report INEEL/EXT-2001-01-485, Rev. 0; Idaho National Engineering and Environmental Laboratory, Idaho Falls, ID (2001b).

Press,W. H. , Numerical Recipes In C: The Art Of Scientific Computing, Cambirdge University Press, 1992.