PNNL-11586
UC-721

Engineering Development of Waste Retrieval End Effectors for the Oak Ridge Gunite Waste Tanks

O. D. Mullen

May 1997

Prepared for
the U.S. Department of Energy
under Contract DE-AC06-76RLO 1830

Pacific Northwest National Laboratory
Richland, Washington 99352

Executive Summary

The Gunite and Associated Tanks Treatability Study at Oak Ridge National Laboratory selected the waterjet scarifying end effector, the jet pump conveyance system, and the Modified Light Duty Utility Arm and Houdini Remotely Operated Vehicle deployment and manipulator systems for evaluation. The waterjet-based retrieval end effector had been developed through several generations of test articles targeted at deployment in Hanford underground storage tanks with a large robotic arm. The basic technology had demonstrated effectiveness at retrieval of simulants bounding the foreseen range of waste properties and indicated compatibility with the planned deployment systems. The Retrieval Process Development and Enhancements team was tasked with developing a version of the retrieval end effector tailored to the Oak Ridge tanks, waste and deployment platforms.

The conceptual design was created by the University of Missouri-Rolla in FY 1995-96. The university researchers conducted separate effects tests of the component concepts, scaled the basic design features and constructed a full-scale test article incorporating their findings in early FY 1996. The test article was extensively evaluated in the Hanford Hydraulic Testbed and the design features were further refined. Detail design of the prototype item was started at Waterjet Technology Inc. before the development testing was finished, and two of the three main subassemblies were substantially complete before final design of the waterjet manifold was determined from the HTB testing. The manifold on the first prototype was optimized for sludge retrieval. A different manifold was designed for high-pressure scarification of the gunite surfaces. The manifolds are interchangeable, as are the other modular subassemblies and most of the parts.

The finished prototype was delivered to PNNL and subjected to a brief round of characterization and performance testing at the Hydraulic Testbed prior to shipment to Oak Ridge. It has undergone extensive operational testing in the Oak Ridge National Laboratory Tanks Technology Cold Test Facility and performed well, as expected. A second unit has been delivered outfitted with the high pressure manifold.

Acknowledgments

RPD&E team scientists and engineers from the Pacific Northwest National Laboratory, Waterjet Technology Incorporated, and University of Missouri at Rolla contributed to the development, design, and testing of the retrieval end effectors. Additional assistance was provided during the process by ORNL GAAT-TS, the end user, ably represented by John Randolph. Individuals deserving of particular mention include Drs. David Summers and Gregor Galecki (UM-R) for conceptual design; Dan Alberts, Joe Allen, and Robert Niblock (WTI) for engineering and production of the prototypes; Brian Hatchell and Leonard Shotwell (PNNL) and Jeff Pintler (WHC) for HTB testing; Jon Smalley (PNNL) for vibration analysis; and Mike Rinker (PNNL) for absolutely dogged program support.

Terms and Acronyms

BOP	Balance of plant—the other systems in the tank farm related to or interfacing with the system(s) discussed
CERCLA	Comprehensive Environmental Response, Compensation, and Liability Act
CMS	cable management system—that portion of the WD&C deployment system which handles and manipulates the conduit, hoses, cables, etc.
CSEE	confined sluicing end effector—the name for the test-article stage of the development of the ORNL waste retrieval end effectors
DOE	Department of Energy
EE	end effector—a tool deployed by a robotic or teleoperated manipulator
F-M	force-moment sensor—a multi-axis load cell, placed in the load path of a structure or mechanism, to detect forces and moments transmitted through it
GAAT	gunite and associated tanks—refers to the underground waste storage tanks in the north and south tank farms at ORNL
GAAT TS	Gunite and Associated Tanks Treatability Study—a project started in FY 1994 to support a record of decision on remediation of waste at ORNL
GEE	gripper end effector—a special end effector which enables the MLDUA to engage with the WDEE inside the tank. The GEE is within the LDUA workscope and is not part of the WD&C system.
GSEE	gunite scarifying end effector—the version of the ORNL waste retrieval end effector specialized for removing contaminated gunite from the tank surfaces
HMS	hose management system—an articulated pipe and hose arm deployed from a vertical mast inserted into a tank riser. The arm is the conveyance system inlet line - a jet pump at the bottom of the mast pumps the waste to the flow control box at the surface. Water, power and control conduits to the end effectors are routed down the mast and out the arm.
HPS	high pressure half-scale scarifier

HTB	Hanford hydraulic testbed—a cold testing facility for waterjet equipment. It includes a gantry manipulator, a medium-pressure pump, simulant preparation facilities and a data acquisition and control system.
ITH	in-tank hardware—the tank being processed may contain various items of scrap metal, tools, or other articles that were tossed into it as radioactive "scrap." All such scrap and structures are considered to be ITH.
MAWP	maximum allowable working pressure
MLDUA	modified light duty utility arm—a light duty utility arm in production with special modifications to comply with ORNL applications (e.g., increased load capacity, etc.)
ORNL	Oak Ridge National Laboratory—the Federal Government facility at Oak Ridge, Tennessee, where the WD&C system will be deployed
SREE	sludge retrieval end effector—the version of the ORNL waste retrieval end effectors specialized for retrieval of sludge waste forms
ROV	remotely operated vehicle
TIP	tool interface plate—the TIP is a two part component of the MLDUA used to allow the GEE to be manually attached to the end of the MLDUA arm in a standardized manner. The arm TIP half remains attached to the MLDUA arm. The end effector TIP half remains attached to the GEE. The TIP is not part of the WD&C.
TMADS	tether management and deployment system—the apparatus mounted on the tank platform atop a riser to deploy the Houdini ROV
TRIC	tank riser interface and confinement system—a service and confinement enclosure mounted on the platform atop a riser. The MLDUA is installed above the TRIC and is deployed into the riser through it.
TT-CTF	Tanks Technology Cold Test Facility—the ORNL tank mock-up
UM-R	University of Missouri-Rolla
UST-ID	Underground Storage Tanks - Integrated Demonstration—a DOE EM-50 program for development of tank waste retrieval technologies
Waste	In this document the term "waste" refers only to those chemical compounds stored in the tank, which were the result of past processing of various chemical and nuclear materials, and does not include various ITH found within the tank.

WD&C	waste dislodging and conveyance—the overall system of equipment (excluding the MLDUA or crawler and the GEE) used directly to dislodge and convey waste from inside the underground storage tanks to the interface with the BOP
WDEE	waste dislodging end effector—that portion of the WD&C system used to dislodge waste from the tank and transfer it to the Waste Conveyance System
WTI	Waterjet Technology Inc.—the subcontractor to PNNL which designed and manufactured the waste retrieval end effectors

Contents

Executive Summary iii

Acknowledgments v

Terms and Acronyms vii

1.0 Introduction 1.1

1.1 Nomenclature 1.2

2.0 Conceptual Design 2.1

2.1 Design Principles 2.1

3.0 Test Article Development 3.1

3.1 Design Basis 3.1

3.2 Features 3.1

3.3 HTB Testing 3.2

4.0 Prototype Development 4.1

4.1 Detail Design 4.1

4.1.1 Functions and Requirements 4.1

4.1.2 Design Basis 4.2

4.1.3 Deployment 4.2

4.1.4 Features 4.3

4.2 Prototype Testing 4.6

4.2.1 Acceptance Testing 4.6

4.2.2 HTB Testing 4.8

4.2.3 ORNL Cold Test Facility SREE Testing 4.18

4.3 Gunite Scarifying End Effector Development 4.23

4.3.1 Scarifying Test Results 4.28

5.0 Conclusions 5.1

6.0 References 6.1

Appendix A - Harmonic Forces Generated by the SREE A.1

Figures

2.1 CSEE Concept Sketch (UM-R) 2.1

3.1 CSEE Test Article - Section View 3.2

3.2 CSEE Sludge Retrieval Test in the HTB 3.3

3.3 Jet Energy Cancellation Theory 3.4

4.1 SREE in the Service Vise 4.1

4.2 SREE Assembly - Partial Section View 4.3

4.3 GSEE Manifold Assembly 4.4

4.4 Submerged Operation Test 4.7

4.5 Water Spray Decontamination Wash Test 4.7

4.6 HTB Gantry Manipulator with SREE (CSEE) 4.8

4.7 End Effector Path, Test Sludge 11 . . . . . 4.10

4.8 SREE Sludge Retrieval Test in the HTB 4.11

4.9 Sludge Retrieval Data Plot - # Sludge 11 . . . . . 4.12

4.10 SREE Scarifying Test in the HTB 4.13

4.11 Maintenance Test 4.14

4.12 SREE Lifting Debris 4.15

4.13 Typical Spectral Analysis of Forces for SREE Retrieving Sludge Simulant Test Sludge 11 . . . . . 4.17

4.14 Sludge Retrieval at ORNL TT-CTF; SREE on the MLDUA, Assisted by the Houdini ROV 4.18

4.15 SREE Deployed with the Houdini ROV 4.19

4.16 Scarifying with the SREE in the ORNL TT-CTF 4.20

4.17 Worn Double-Lip Seal 4.21

4.18 SREE on the MLDUA, from Overview Camera with Hose Management System at Right 4.22

4.19 Mist Generation While Scarifying 4.23

4.20 Scarifier Test Coupons 4.28

4.21 Volumetric Retrieval Rate vs. Jet Pressure 4.29

4.22 Efficiency vs. Jet Pressure 4.30

4.23 Cutting Volumetric Rate vs. Standoff Distance 4.31

Tables

4.1 SREE/GSEE Operating Parameters 4.5

4.2 Sludge Retrieval Test Parameters 4.9

4.3 Sludge Test 11 Parameters 4.10

4.4 Sludge Retrieval Performance Summary - Test # Sludge 11 . . . . . 4.11

4.5 SREE Scarifying Test Parameters 4.13

4.6 Gunite Scarifying Test Data - WTI Tests 4.25

1.0 Introduction

The Gunite And Associated Tanks (GAATs) at the U.S. Department of Energy's Oak Ridge National Laboratory (ORNL) were built between 1943 and 1951 to store a portion of the neutralized acidic radioactive and hazardous chemical waste byproducts of weapons materials processing. Later ORNL used these tanks to collect radiochemical and hazardous wastes from various laboratories in support of nuclear energy research and development.

The tanks were decommissioned in the 1970s because of potential risk to the environment and the public. Between 1982 and 1984, approximately 90% of the waste material was retrieved from the tanks by means of past-practice (fixed monitor) hydraulic sluicing, pre-treated and transported to stainless steel tanks at the Melton Valley Storage Tanks at ORNL for long-term storage. Sluicing was effective for bulk sludge removal, leaving behind a heel of residual wastes.

Currently, the residual waste volumes are approximately 49,000 gallons of radioactive sludge and solids, and approximately 346,000 gallons of supernate. Because of the potential risks to human health and the environment, a remediation effort is being addressed under the provisions of the Comprehensive Environmental Response, Compensation, and Liability Act (CERCLA).

The Gunite and Associated Tanks Treatability Study (GAAT-TS) was initiated in FY 1994 to identify and evaluate technologies and methodologies for characterization, retrieval, treatment and disposal of the GAAT waste and for characterization and closure of the tanks, thereby supporting the process of selecting technology, establishing schedule and budgets, and defining realistic performance objectives for the remediation of the GAATs

After review of a number of retrieval technologies and deployment systems, the GAAT-TS selected one retrieval system and two deployment systems for evaluation and development into an integrated retrieval system which is undergoing cold testing at the Tanks Technology Cold Test Facility (TTCTF) and hot deployment in the North Tank Farm.

The Modified Light Duty Utility Arm (MLDUA) and the Houdini Remotely Operated Vehicle (ROV) were the deployment systems selected. Each has unique capabilities and neither is capable of all the required tasks, but working in tandem they are expected to provide all requisite functionality, maneuvering the characterization and retrieval equipment to all necessary parts of the tank.

The retrieval system selected is the waterjet-based dislodging end effectors and jet-pump conveyance system under development by the Waste Dislodging and Conveyance System (WD&C) at Hanford. The WD&C System, a team of researchers and engineers from Pacific Northwest National Laboratory, Westinghouse Hanford Co., Waterjet Technology, Inc. (WTI), and the University of Missouri-Rolla (UM-R), was reorganized in FY 1996 to become Retrieval Process Development & Enhancements (RPD&E). WD&C

had been developing retrieval end effectors and conveyance systems (Hatchell, Rinker, and D. Mullen 1995; Summers, et al. 1994, Powell 1994; Rinker, Mullen, and Hatchell 1995; and Rinker et al. 1996) for use in the Hanford tanks. In FY 1995, WD&C was tasked by the DOE UST-ID with:

1. writing a Functions and Requirements document for the ORNL GAAT-TS retrieval system (Mullen and Potter 1995).

2. initiating development of a retrieval end effector for the ORNL tanks, based on the work previously performed at UM-R on a medium-pressure waterjet end effector scaled to Hanford tanks and a large robotic arm deployment system (Summers et al. 1994, 1995).

3. developing simulants of the GAAT waste for cold testing (Golcar et al. 1997)

In FY 1996, RPD&E was tasked with continuing the development of the retrieval end effector, building and testing a full-scale test article and designing, building and testing a deployable prototype.

In FY 1997, the prototype sludge waste retrieval end effector was extensively tested at ORNL, a second version was designed and built for scarifying gunite, and a tether handling system was designed and built to enable ORNL to deploy two retrieval end effectors at once.

1.1 Nomenclature

The nomenclature of the retrieval end effectors developed in this program has undergone some evolution along with the designs. They have all been informally termed the Confined Sluicing End Effector or CSEE. At this stage it is appropriate that distinguishing names be used. The original concept was that of a Confined Sluicing End Effector. By the time the concepts had been refined and combined into the first full-scale test article, the term “confined” was no longer accurately descriptive, and “sluicing” was more accurately “waterjetting.” For the sake of tradition, however, we shall refer to the University of Missouri-Rolla test article as the CSEE. The two prototype end effector configurations delivered to ORNL for testing and deployment shall be referred to as the Sludge Retrieval End Effector (SREE), the low-pressure scarifier integrated with the conveyance system, and the Gunite Scarifying End Effector (GSEE), the high-pressure device designed to fragment and remove a layer of gunite from the surface for later retrieval.

2.0 Conceptual Design

The design concept for the CSEE originated at the Rock Mechanics & Explosives Research Center at UM-R. It was an outgrowth of conceptual development work (Summers et al. 1994) for a proposed Hanford-scale end effector, based loosely on commercial waterjet scarifier devices.

2.1 Design Principles

Two primary functions are performed by the CSEE: It must fragment and dislodge the waste, and it must introduce the waste into the inlet of a conveyance system in a manner conducive to efficient conveyance.

The basic concept of the CSEE (Figure 2.1) is that of a scarifier, a rotating array of several (three) small waterjets which fragment and dislodge the waste. The jet nozzles are arrayed on a manifold which rotates about an axis roughly normal to the waste surface. The jet size and pressure, rotational frequency, and traverse speed are tailored to the properties of the waste. The general concept of the scarifier has been in commercial application for years to remove coatings from paint booths and ship hulls and to remove decayed concrete from roads and bridge decks without damaging the reinforcing steel.

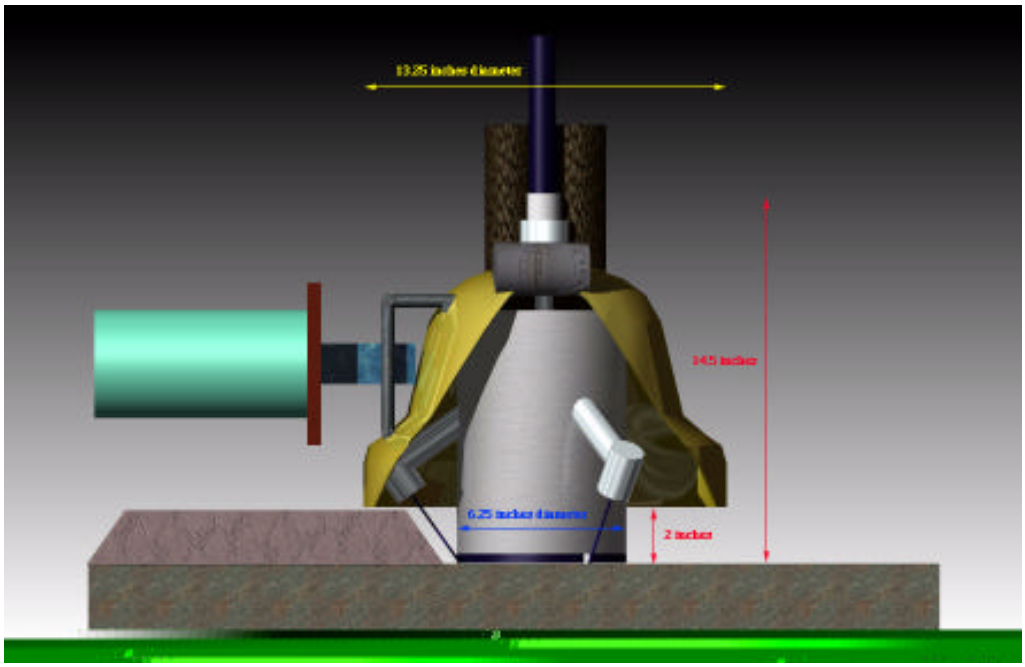

Figure 2.1. CSEE Concept Sketch (UM-R)

The initial concept for the CSEE was to have the scarifying contained within a scavenging shroud, the inlet to the conveyance system; hence, the "Confined" in the name. As the design concepts were tested and developed, the confinement shroud proved impractical and evolved into a simple protective cover for the manifold. A full description of the rationale and development process is given in Summers et al. (1995).

The confined sluicer is coupled to a conveyance system which removes the waste from the tank as it is dislodged by the scarifying process. The conveyance system employs an in-line, radial jet pump with medium-pressure (4,000-8,000 psi) water as the motive fluid. The inlet of the pump is connected to the CSEE by a combination of pipe and hose to accommodate deployment requirements, and the pump discharges to the BOP at the surface. The jet-pump conveyance system can handle gas, liquid, divided solids and multi-phase flows; the predominant mode for waste retrieval is dilute multi-phase flow.

The operational considerations driving the evolution of the conceptual design were the conflicting needs to confine the spray of loose waste material created by the jets, to direct that material into the conveyance inlet, and to operate over an irregular surface without plowing the device into high spots while keeping the jets and inlet close enough to the waste to maintain productivity. A solution to the problem was found in the final arrangement of the conveyance inlet nozzle on the manifold axis, projecting several inches toward the waste surface. The jets are angled inward toward the axis of rotation. As the manifold rotates, the jet paths define a cone outside the inlet nozzle. As the end effector traverses through the waste, the inlet nozzle can be well below the waste surface since the jets cut clearance for it. The rotating manifold is held above the waste surface and protected by a shroud.

3.0 Test Article Development

3.1 Design Basis

The UM-R test article, named the Confined Sluicing End Effector or CSEE, incorporates the design concept and features defined and developed in the single-effects testing described in Summers et al. (1994).

The jets are directed at the inlet ports, small notches at the bottom edge of the inlet shroud, with the actual nozzle angle adjusted to compensate for the velocities of the nozzle, the jet and the shroud. The jets were intended to entrain waste and carry it through the ports, splatter it off the tank floor and mobilize it into a spray easily captured by the conveyance airflow. Incidental loose sludge would be sucked into the inlet area by airflow around the periphery of the inlet shroud, helping to create clearance for the traverse motion of the shroud and cleaning the tank surface.

3.2 Features

Figure 3.1 shows the main features of the Test Article:

- Outer shroud, stationary to contain spray and protect the rotating manifold
- Manifold cover, rotating with the manifold, to protect the manifold and provide partial seal to the conveyance inlet.
- Manifold
  - Armature, hollow to provide flow path, press-fit into the motor armature
  - Arms, 9/16” OD medium pressure tubing, ¼ male pipe threaded ends
  - Nozzle carriers, ¼” pipe thread
- Inlet Shroud, rotating with the manifold
- Motor, DC brushless servomotor with Hall-effect sensors
- Conveyance Line Connection
- Swivel coupling, connecting stationary supply water line to the rotating manifold

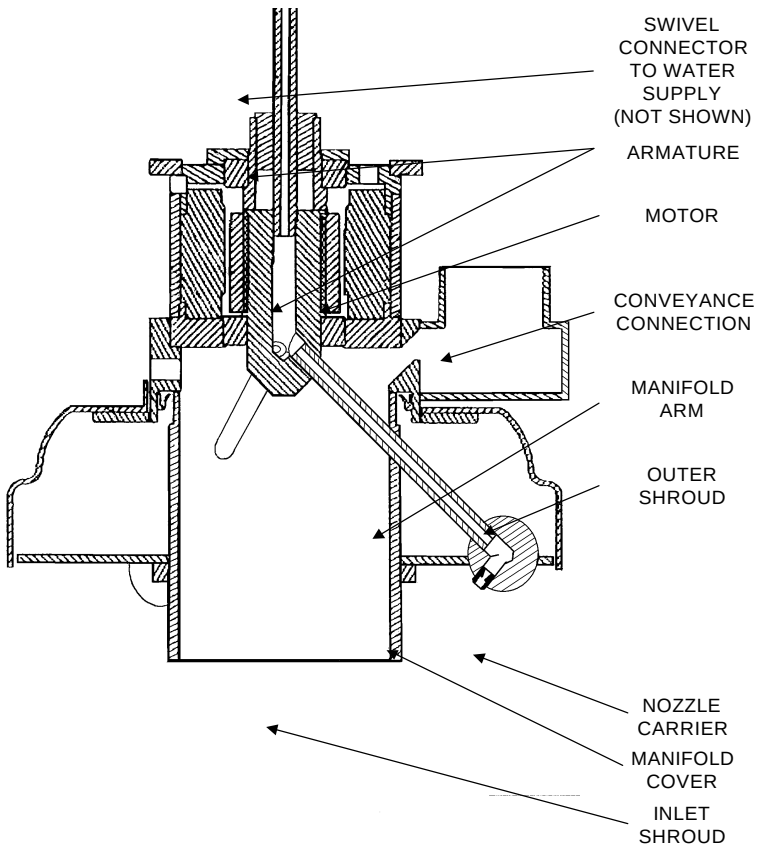

Figure 3.1. CSEE Test Article - Section View

The motor was outfitted with an optical encoder for speed control, but the University did not complete the controller system. For testing at Hanford, the motor was controlled using the controller built by WTI for the Lightweight Scarifier (an ultra-high pressure end effector for saltcake waste retrieval and decontamination work), which used the same type of motor. The optical encoder was removed.

3.3 HTB Testing

The CSEE was extensively tested in the Hanford Hydraulic Testbed (HTB) shown in (Figure 3.2). The procedures and observations are reported by Rinker et al. (1996). The testing was recorded on videotape and the process parameters, conveyance system data and the forces and torques incurred at the interface to the gantry manipulator were recorded by a data-acquisition system for analysis. Retrieval performance was not quantitatively measured. Qualitative observations were deemed sufficient for the task of refining the CSEE design.

Figure 3.2. CSEE Sludge Retrieval Test in the HTB

The conceptual design proved sound in most respects and was substantially preserved in the final prototype. The developmental work and testing revealed that some elements of the conceptual design were flawed. The two most problematic elements were the rotation speed of the manifold and inlet shroud and the posited cancellation of jet momentum.

It was considered desirable to rotate the CSEE manifold at a high frequency to avoid excitation of fundamental frequencies of the deployment arm, assumed to be 1-1.5 Hz. Therefore, the manifold was intended to rotate at up to 600 rpm (10 Hz). The apparatus used for concept development was limited to about 200 rpm and had no reliable speed control. During later testing with the "test article," it was learned that the rotating inlet nozzle behaved as a centrifugal pump, slinging sludge away from the inlet area and countering the action of the conveyance pump, resulting in very low productivity. This phenomenon was not significant at up to about 200 rpm, so was overlooked early on. Fortunately, the prototype was very well balanced , the forces generated by the scarifying and scavenging proved to be moderate and not strongly harmonic, and the operation in the sludge with the hoses attached probably provided useful damping, so it proved possible to operate the CSEE at low rotational speeds without exciting the arm.

It was posited that aiming the jets equally off the rotation axis so they would collide obliquely (Figure 3.3) after deflecting off the tank floor would result in significant cancellation of momentum and dispersal of the jets into a diffuse mist easily captured by the conveyance inlet. When the idea was implemented in the test article and subjected to testing at Hanford, it was found that jets of more than about 500 psi would deflect off the tank floor then combine into fairly coherent fans parallel to the floor which were substantially unaffected by the conveyance inlet. The escaping water would readily undermine the sludge bed and escape, defeating the functional requirement that the system capture most of the process fluid immediately and add a minimum of free liquid to the tank contents. However, it was found that 250 psi jets were quite adequate for dislodging conservatively formulated sludge simulants and that certain combinations

of jet pressure, rotation and traverse speeds effectively dislodge, fragment and mobilize the waste while not overpowering the conveyance system's ability to capture the product.

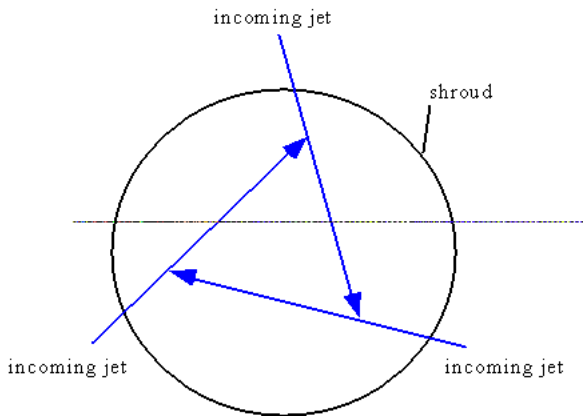

Figure 3.3. Jet Energy Cancellation Theory

Further bench scale testing was performed at UM-R to see whether variation of some of the geometry parameters beyond the ranges possible with the CSEE might result in better performance. It was found that performance was dramatically improved by increasing the radial distance of the jet nozzles from the axis of the manifold so the jets would hit the tank floor about two to three inches outside the projected perimeter of the inlet shroud. In that configuration, low-pressure (250 psi) jets could cut the sludge to the floor on the leading side of the end effector, gently toss the slurried waste toward the inlet shroud so it could be captured easily, and rinse the tank surface clean on the trailing side of the end effector, with the rinse water being captured by the conveyance shroud. In the configuration tested, the inlet shroud was 6 inches in diameter so the resulting kerf in the sludge was 10-12 inches wide. This geometry was not practical for the SREE because the required manifold diameter was too big for the allowed overall dimensions of the device, but it led to the prototype configuration.

4.0 Prototype Development

4.1 Detail Design

The end effector built for ORNL is considered to be a prototype of fully hardened units to follow if needed. The prototype may prove sufficiently resistant to actual tank environments that it will survive the entire GAAT retrieval campaign, but it is planned only to serve the Treatability Study in the North Tank Farm. The prototype was designed and built with components for assembly in two configurations, the Sludge Retrieval End Effector or SREE (Figure 4.1), and the Gunite Scarifying End Effector or GSEE.

4.1.1 Functions and Requirements

The functions and requirements for the prototype end effectors were laid out in Mullen and Potter (1995), Mullen (1996), and Mullen (1997). Mullen and Potter (1995) treats the overall requirements of the tank environment, the deployment systems, the conveyance system, the overall retrieval system controls, confinement and contamination control, safety and quality assurance and regulatory requirements. Mullen (1996 and 1997), the specifications for the end effectors, address specific requirements for the SREE and GSEE.

Figure 4.1. SREE in the Service Vise

4.0 Prototype Development

4.1 Detail Design

NEEDED ONLY FOR NUMBERING SEQUENCE -- SEE 5041B4-1.WPD

4.1.1 Functions and Requirements

Figure 4.1. SREE in the Service Vise

4.1.2 Design Basis

The basic functional geometry of the SREE is that of the UMR CSEE. The functional geometry of the GSEE was based on earlier WTI scarifier designs (the LWS and the Half-Scale Scarifier) and validated by testing with gunite simulants by WTI. The two devices use the same motor and chassis, but have specialized manifold assemblies and ancillary parts.

The motor used in the CSEE had previously been used successfully in the Lightweight Scarifier. The frameless motor has a form factor well suited for the application. WTI has experience with the motor and its controls, and it appeared to provide appropriate performance and operating characteristics , so the same type of motor was selected for use in the SREE/GSEE.

The kerf defined by the jet geometry and nominal sludge depth would produce the desired retrieval rate at the desired traverse speed (1-2 inch/sec).

The basic geometry of the CSEE had been scaled to approximately conform to the physical envelope dimensions, weight budget and orientation constraints defined by the deployment systems. The SREE/GSEE were designed to conform strictly to those requirements.

At the time the detail design was initiated, testing of the CSEE was still in progress at the HTB. A satisfactory geometry for the conveyance inlet shroud, manifold arrangement, and inlet screen had not yet been determined. WTI was authorized to proceed with the design of the main chassis and the motor can assembly and defer completing the manifold and shroud details until better guidance was available. Further HTB and UM-R testing eventually resulted in strong indications of a suitable configuration which was provided to WTI and incorporated in the final design.

4.1.3 Deployment

The limited capacities of the MLDUA and the details of the interface between the end effectors and the manipulators imposed the most stringent requirements on the design of the end effectors.

4.1.3.1 Gripper X-Handles and Alignment Target

The SREE/GSEE was to be deployed by the MLDUA and the Houdini ROV, each having a Gripper End Effector (GEE) which would engage handles on the end effector. Two handles were required, in different orientations, to facilitate presenting the EE to the tank surfaces from a variety of approach angles. Each gripper handle was to be augmented by a target designed by ORNL for aligning the gripper with the handle using the monocular video camera in the gripper for primary guidance. The targets and gripper handles were furnished by ORNL. The target design was not completed until well after WTI had finalized the gripper handle bracket design but the final target design conformed to the envelope defined in the preliminary stages.

4.1.3.2 Size and Weight

The weight budget for the complete end effector, including the grip handles was set at 50 lb by agreement between ORNL and SPAR Aerospace, Ltd, the designers and manufacturer of the MLDUA and GEE, at the conceptual design review for the MLDUA/GEE. Size and shape limitations were imposed by the riser diameter and by the interior dimensions of the Tank Riser Interface Confinement (TRIC) and the TMADS Houdini RCA deployment system.

4.1.4 Features

Following is a discussion of the salient features of the prototype designs. Extensive treatment of details is omitted to protect intellectual property.

4.1.4.1 Modularity

The SREE/GSEE is designed to facilitate maintenance and conversion with modular major subassemblies shown in Figure 4.2.

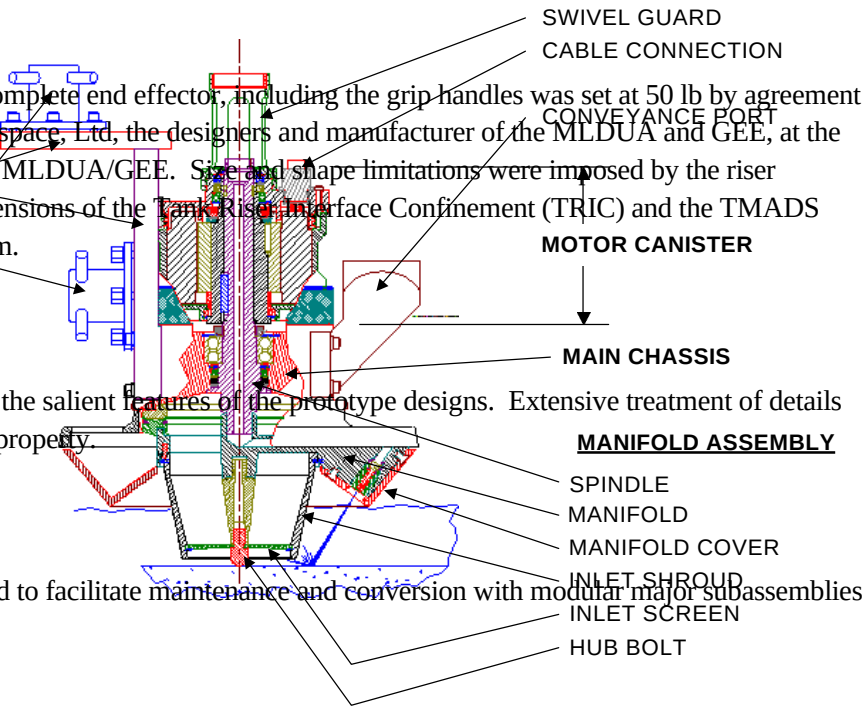

Figure 4.2. SREE Assembly - Partial Section View

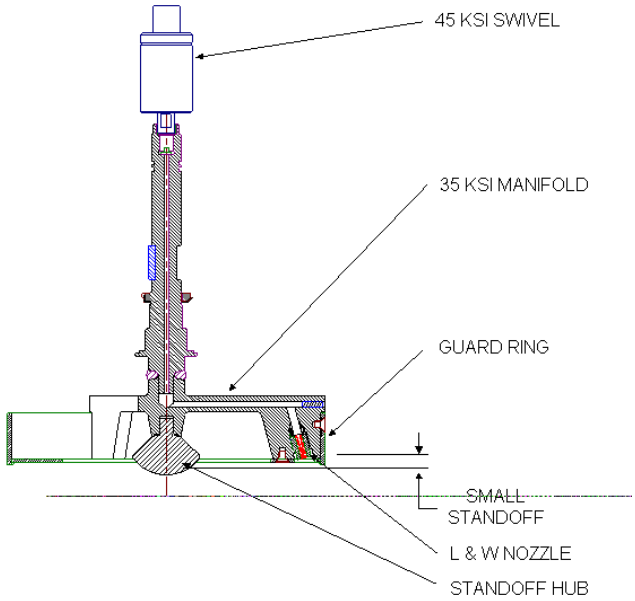

The gripper handles and alignment target are mounted on a bracket which can be removed with four machine screws. It ordinarily would not be removed during servicing or conversion of the EE since the Hose Management System confinement service box is equipped with a vise to engage the gripper handles on the end effector and hold it securely during servicing. All major service can be performed with the EE held in the vise.

The motor is housed in a sealed canister and can be readily exchanged as a unit. The cables, swivel and swivel guard must be removed first. A special wrench is provided to loosen the lockring that secures the motor canister to the main chassis. The motor can contains independent bearings which are isolated from impact or thrust loads and serve mainly to maintain alignment of the motor parts.

The other components all mount to the main chassis or to the bearing housing assembly. The large main manifold bearings isolate the motor bearings from forces generated by contact between the manifold hub and tank surfaces.

The manifold assemblies are interchangeable. Figure 4.2 shows the SREE manifold. Figure 4.3 shows the GSEE manifold with the high-pressure swivel. The conveyance port is replaced with a cover when the end effector is used for scarifying.

Figure 4.3. GSEE Manifold Assembly

4.1.4.2 Operational Parameters

The operating parameters for the two versions of the end effector are shown for comparison in Table 4.1.

Table 4.1. SREE/GSEE Operating Parameters

	SREE	GSEE
Working Pressure	200-10,000 psi	500-30,000 psi
Rotation Speed	60-200 rpm	60-600 rpm
Nozzle Size (nominal)	0.032"	0.024"
Traverse Speed	0-2 inch/sec	1-5 inch/sec

4.1.4.3 Design Details

Following is a discussion of the design details and rationale for particular elements.

- *Inlet Shroud* - The lessons learned in the later testing at UM-R were incorporated into the design of the inlet shroud. The shroud was tapered to reduce the diameter at the inlet, allowing the jets to strike the tank surface a short radial distance out from the shroud edge, break up on impact and dissipate some energy before entering the inlet area. The smaller inlet port results in a somewhat increased conveyance air velocity at the inlet perimeter, but probably results in a greater pressure drop across the inlet as well, leaving a smaller differential pressure to motivate flow through the conveyance line to the jet pump. The spindle in the center of the shroud was added to provide support for the screen retaining bolt (which doubles as a standoff to keep the shroud from being sucked down to the tank surface) and to achieve a progressive transition of the inlet cross-section area. The sloping side of the inlet shroud mitigates the centrifugal pumping action noted on the straight shroud in the CSEE; the SREE shroud pumps any material inside it upward toward the conveyance port.

- *Inlet Screen* - The initial design for the inlet screen is a 3/8” hex-cell pattern cut from 12 gage sheet stainless steel. The pattern was selected to provide the maximum open area while limiting the smallest dimension of anything passing the screen to less than 3/8”. The initial screen tended to plug readily when operating in sludge simulant impregnated with irregular lava gravel. Alternative designs with radial “petal” patterns intended to shed gravel more easily are being evaluated at ORNL. To date none have proven much more resistant to blockage or easier to clear. The inlet screen has been effective at protecting the jet pump and conveyance passages from blockage by debris.

- *Manifold* - The manifold was designed to be fabricated in a weldment of two main pieces laid out to provide relatively efficient manufacturing and be extremely robust. The arms of the manifold were arrayed in a plane to eliminate joints and reduce the fabrication cost. To deliver a more coherent jet, the flow passages were enlarged relative to those in the CSEE. The flow passages make a more acute angle at the ends of the arms, but the entry passages immediately upstream of the nozzles are thereby made longer. The nozzles are carbide insert Leech & Walker type, with a tapered shell, mounted in a holder and compression seal set which provides a fair flow passage boundary. A flow straightener is fitted upstream of each nozzle to further improve jet quality. A substantial improvement in jet quality was achieved.

- *Environmental Resistance* - O-ring seals are used at all static joints in the watertight containment boundaries. O-rings and plastics used for seals were selected for radiation resistance. Sealed bearings and submersible cable fittings are used. The SREE is fully submersible and withstands a 1500 psi fanjet washdown spray from a nozzle as close as 6 inches. Anodized aluminum was selected for the main chassis and motor can to save cost. If the SREE/GSEE is to be deployed in tanks with more caustic contents than found in ORNL tanks W-3 and W-4, it may be necessary to replace those parts with titanium alloy parts.

4.1.4.4 Design for Maintainability

The modularity of the design allows for rapid repairs in the event of a component failure. If the failure is in the motor or manifold, the disabled module is readily replaced working within the confinement enclosure, and the end effector can be returned to service in a matter of minutes or a few hours. The affected module can be decontaminated in the confinement enclosure at the tank and serviced in the equipment maintenance tent at the tank farm or in a shop equipped to handle mildly contaminated hardware.

The end effectors are serviceable using mostly standard hand tools. Special spanner wrenches are provided to remove and replace the swivel guard and the motor can retainer ring. Replacement of the bearings and seals requires the use of a small press; dies to facilitate removal and installation of all such parts are provided.

The most frequently replaced items are reasonably easy to service. The swivel can be replaced as a unit, removing only the swivel guard, the motor cables and the supply hose. The jet nozzles can be replaced directly without removing other parts. The inlet shroud and the inlet screen are likewise readily replaceable.

4.2 Prototype Testing

The SREE acceptance and performance testing was videotaped and the data compiled into a video presentation titled “CSEE Acceptance and Functionality Testing.”

4.2.1 Acceptance Testing

The SREE underwent acceptance testing at WTI in June 1996. Acceptance testing included:

- Static pressure testing of the manifold assembly with plugged nozzles - one hour at 15,000 psi (150% of the maximum allowable working pressure)

- Dynamic pressure testing - 100 cycles from 0 to 10,000 psi while rotating at 600 rpm

- Jet coherency test - Plywood specimens were perforated by the jets and the resulting holes were measured. Exact measurement of the holes proved problematic but a substantial improvement in the performance of the SREE over that of the CSEE was observed.

- Static submersion test - under 12 ft of water for 8 hours

- Running submersion test - under 2 ft of water for 2 hours (Figure 4.4)

Figure 4.4. Submerged Operation Test

- Water-spray decontamination tests

  - 1500 psi 25° wide fanjet from about 6 inches on all sides, simulating the TRIC riser decontamination spray ring (Figure 4.5)

Figure 4.5. Water Spray Decontamination Wash Test

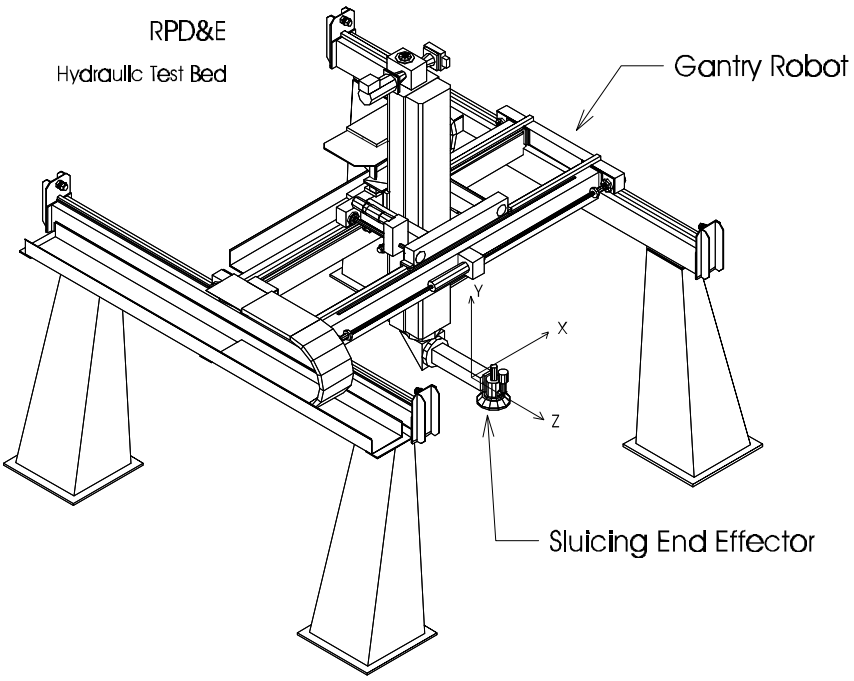

- 500 psi 15° wide fanjet from about 6 inches on bottom and various other angles, using the handheld HMS decontamination spray gun

Both tests were to demonstrate decontaminability and watertight integrity. Fluorescent dye was added to a stiff kaolin paste which was smeared and packed on the exterior and wetted internal surfaces of the SREE. After washdown, the unit was disassembled and carefully inspected under a strong ultraviolet light for traces of the dye.

- Controls and instrumentation testing to verify proper operation and accuracy.

- Static torque output test and internal friction torque test.

4.2.2 HTB Testing

When the SREE was delivered to Hanford in June 1996 for performance testing at the HTB (Figure 4.6), the budgetary resources were very limited. Consequently, the testing was tightly scheduled and the matrix of operational parameters was somewhat constrained. The initial planned ranges for test parameters were based on the results of the CSEE testing, with some latitude for determining the effects of the design changes. Certain combinations of operating parameters were tested which proved very successful for sludge waste retrieval. It is uncertain whether the global optimum combination was found, and it is uncertain whether there are other local performance maxima. For instance, it may be that higher

Figure 4.6. HTB Gantry Manipulator with SREE (CSEE)

jet pressures coupled with high rotational speed will result in good sludge retrieval performance with the SREE, but this was not indicated when testing the CSEE, so testing of the SREE in that regime was not pursued.

4.2.2.1 Sludge Retrieval Tests

Test Parameters. The parameters for SREE sludge retrieval testing are given in Table 4.2.

Table 4.2. Sludge Retrieval Test Parameters

Jet Pressure	0 and 250 psi
Traverse Rate	1, 2, and 12 inch/sec
Rotation Rate	0, 60, 90, 0-100-0, 120, and 240 rpm
Standoff Distance	Minimal to 1/4 inch (the irregular and flexible tank floor caused variation from the nominal distance)
EE Angle	0, 5, and 11 ° from vertical, tilted backward from direction of travel
Path Offset	4 inches, 6.6 inches

Simulant. The simulant used for all the sludge retrieval testing was 46 wt% water, 48 wt% kaolin, and 6 wt% playground sand. Gravel (porous lava, not screened, mostly <3/4") was added to the simulant for some tests to challenge the inlet screen. For two tests the simulant was heavily loaded with dried sludge, wire, gloves, gravel and other debris to assess the impact of such items on the operation. Some dilution of the simulant probably occurred during testing because the simulant was not replaced entirely between sets of test runs, but rather was supplemented to restore the volume in the test tank. In some cases the conveyance system did not effectively scavenge the kerf to the tank floor so some diluted sludge residue was left behind. In most cases this was retrieved on a second pass with or without the jets operating so dilution was minimized.

Performance. Test # Sludge 11 was an extended run in a bed of sludge varying in depth between 2-1/2" to 3-1/2" from one side to the other. Test 11 was conducted with operating parameters (Table 4.3) determined in previous tests to give good performance. It was selected for discussion as being representative of probable SREE field performance.

The SREE was maneuvered in a "lawnmower" path as shown in Figure 4.7 with a pass parallel to one side of the tank, in the 3-1/2" deep sludge, making a U-turn at the end of the path and reversing the traverse with a 4" offset from the first path. The pattern was repeated across the width of the tank. The retrieval rate calculations in Table 4.4 are from data taken during a 151 second period starting at about 2350 sec (clock time - horizontal axis) in Figure 4.8. Before 2350 sec, the end effector was above the simulant while pressures were adjusted and the manipulator program was initiated. The airflow shows

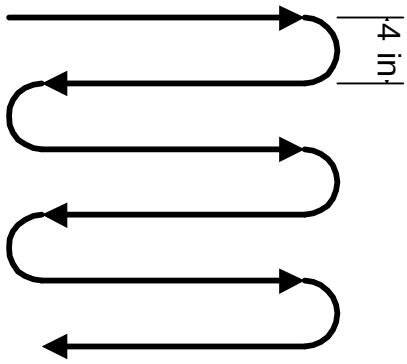

Table 4.3. Sludge Test 11 Parameters

Jet Pressure	250 psi
Traverse Rate	2 inch/sec
Rotation Rate	60 rpm
Standoff Distance	Minimal to 1/4 inch (the irregular and flexible tank floor caused variation from the nominal distance)
Path Offset	4 inches

Figure 4.7. End Effector Path, Test Sludge 11

clearly when the end effector is plunged into the simulant, and the slow increase in airflow during the test is an effect of the decreasing depth of sludge which both reduces the slurry loading on the pump and opens up the inlet restriction.. The parameters for test Sludge 11 are shown in Table 4.3.

The test results are summarized in Table 4.4. The water consumption is calculated from the sum of the measured flow rates averaged over the 151 second duration discussed. No direct volumetric measurement was taken of cumulative water flow. The sludge retrieval volume was also calculated from before-and-after geometric measurement and agrees with the calculated value below.

The sludge remaining after Test # Sludge 11 was redistributed in the test tank and a second pass (Test # Sludge 13) made at the same settings but slightly greater standoff distance. (Test # Sludge 12 was aborted when the tank floor flexed upward and blocked off the SREE inlet. The screen retaining bolt had been removed - it was replaced to maintain standoff from the flexible test tank floor.) The retrieval rate was about 2 gpm of sludge, while consuming the same 11.7 gpm of water. A third pass (Test # Sludge 14) made without the jets running cleaned the tank floor of the remaining ~6 mm (3/8”) of slurry using only the 10.5 gpm jetpump water.

Figure 4.8. SREE Sludge Retrieval Test in the HTB

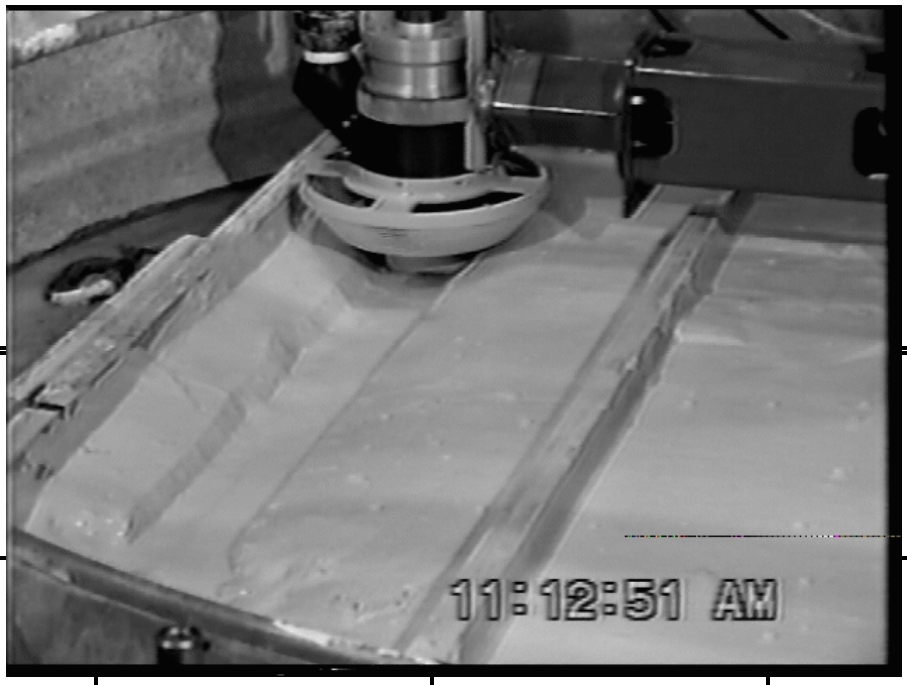

Table 4.4. Sludge Performance Retrieval Summary - Test # Sludge 11

Retrieval Performance - Test # Sludge 11 Time (sec) 151			**Period**
Sludge Retrieved	Calculation (order)	Water Consumed	Calculation (order)
238 lb	(4) Hopper weight change less water used	247 lb	(3) Volume x density
18 gal	(5) Weight/density	29.5 gal	(2) Flow rate x time
7.1 gal/min	(6) Volume/time	11.71 gal/min	(1) Flow rates averaged and added
Constants Used			
S.G. of sludge	1.58	Average SREE jet flow	1.26 gal/min
lb/gal water	8.3551	Average jetpump flow	10.45 gal/min

The water consumption plotted in Figure 4.9 includes the motive water for the jet pump. The jet pump consumed 90% of the total water used (see Table 4.4). The water consumption of the end effector is proportional to the square root of the pressure; increasing the pressure to attack more resistant wastes will increase the water use. The airflow plotted is the air flow volumetric rate through the conveyance system; it generally greater than 95% of the total conveyance flow volume at standard pressure and more at the reduced pressure in the conveyance line, therefore the flow is considered “dilute” multiphase flow.

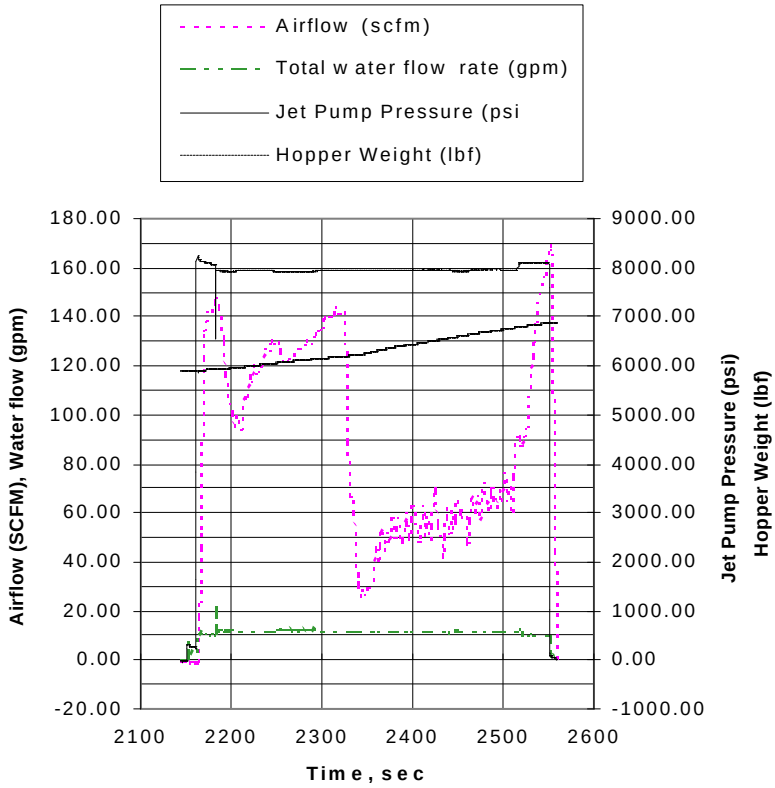

Operating the jet pump at lower pressure might not degrade its performance significantly and would reduce the dilution ratio considerably. A separate task currently (FY97) being conducted to consider enhancements to the jet pump with the intent of improving the overall retrieval dilution ratio and the wear resistance of the pump.

4.2.2.2 Scarifying Tests

The SREE was expected to function as a scarifier and remove at least ¼” of gunite at 1 inch/sec traverse speed, at a water pressure between 7,000 and 10,000 psi. Testing of the SREE at the HTB at up to 7,800 psi (the maximum available) did not yield satisfactory scarifying performance. Figure 4.10

Figure 4.9. Sludge Retrieval Data Plot - # Sludge 11

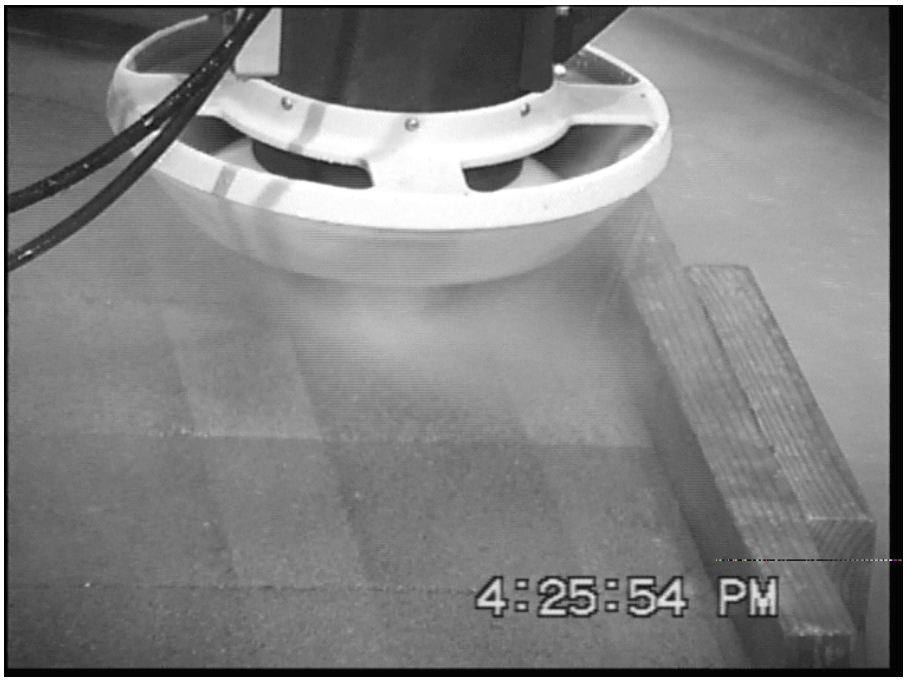

Figure 4.10. SREE Scarifying Test in the HTB

shows the SREE scarifying concrete pavers in the HTB. The HTB SREE scarifying test parameters are shown in Table 4.5. The surface of the pavers was etched slightly but no significant amount of concrete was removed.

Table 4.5. SREE Scarifying Test Parameters

Jet Pressure	5300, 5800, 6300, 6800, 7300 psi (straight cut) 7300, 7800 psi (scarifying passes)
Traverse Rate	1 inch/sec
Rotation Rate	75, 150, 300, 600 rpm
Standoff Distance	Minimal to 1/4 inch

The inadequate scarifying performance of the SREE and program decisions at ORNL GAAT-TS prompted the development of the Gunite Scarifying End Effector (GSEE) discussed in a separate section.

4.2.2.3 Maintainability Testing

Decontamination. After the sludge retrieval testing was complete, the SREE was subjected to pressure washing with a hand-held 25 ° wide fan-jet spray gun at 1500 psi from a distance of at least 6 inches, and, inside a dummy glovebox, to local washing with a hand-held spray gun at lower pressure.

Maintenance. The SREE was partially dismantled and routine service operations were performed in a dummy glovebox (Figure 4.14) having the same critical dimensions as the HMS confinement box. Some residual sludge simulant was observed and washed off as the servicing progressed. Most of the residue found was trapped in the double lip seal between the chassis and the manifold. A hand spray gun with a short wand tip bent at a 60-90 ° angle would facilitate decontamination of the wetted parts of the SREE prior to disassembly and reduce exposure. Radioactive contamination could be detected and removed with little

exposure; cold simulants could not be detected without disassembly and visual inspection. Unless the actual sludge waste is unusually adhesive, it should not be difficult to decontaminate the SREE thoroughly and service it with minimal exposure.

Figure 4.11 . Maintenance Test

No contamination or water was found inside the sealed parts of the SREE, i.e., in the motor can or the bearing housing cavity.

Servicing presented no untoward difficulties. Replacement of an O-ring seal under the motor can retaining ring (Item 16 on Drawing 81937S2 - Motor Can Assembly) required that an O-ring be placed in the groove for the retaining ring (17) temporarily so the new O-ring could be inserted in the groove in the coupling nut (15) and slid past the first groove. Once the coupling nut is in place, the sacrificial O-ring is removed and the retaining ring (17) replaced. Otherwise, replacement of all the soft seals was straightforward.

4.2.2.4 Operation

The starting sequence found most effective was to bring the SREE to a position just above the waste surface, start manifold rotation, then start the jets, then the jet pump, then to lower the EE and start traversing. To minimize water consumption, the starting sequence should be well-rehearsed and executed quickly. Pressures can be fine-tuned during operation and needn't be perfect before starting.

No particular advantage was noted to operating the end effector tilted away from normal to the surface. It was posited that tilting it back from the direction of travel would close off the airflow passage between the trailing edge of the inlet shroud and the tank floor, forcing more airflow through the rest of the gap at the leading edge of the inlet shroud and improving the scavenging performance. If there is any such benefit it is very subtle and probably not worth the added kinematic complications required. It should be noted that the angled-presentation tests were necessarily brief, since the HTB gantry manipulator has no wrist. The angulation was achieved with a manually-adjusted bracket, limiting the test runs to single passes in one direction.

The inlet screen was tolerant of debris such as gravel, wire, plastic bags, lumps of clay, and gloves and has proven effective at protecting the jet pump from blockage. The only persistent blockage of the inlet was due to gravel jamming in the screen. Other debris was excluded and could be picked up, moved and dropped into a container by using the conveyance vacuum to hold it against the inlet screen (Figure 4.12). This

procedure is costly in terms of water for the jet pump, however, and more efficient means of isolating the troublesome debris should be explored at ORNL.

Gravel trapped in the inlet screen was sometimes difficult to dislodge. ORNL should consider a scraper or stiff brush on the Houdini ROV, against which the SREE could be spun to dislodge gravel from the screen. The screen is quite robust and could tolerate such measures.

Figure 4.12. SREE Lifting Debris

4.2.2.5 Controls

The only anomalous behavior observed in the SREE control system was that when the motor was stalled by an overload the speed or position error signal would apparently build up in the controller processor until the load was released, whereupon the speed would quickly ramp up and overshoot the command speed by a large margin. The behavior appeared to be that of an underdamped constant-speed controller, however no detailed record was made of the motor speed for analysis. The behavior was observed on the test bench at WTI while testing the torque output of the unit, and in the HTB when the end effector was bogged down during retrieval of sludge simulant salted with debris. In the latter case, lifting the end effector out of the simulant occasioned rapid spin-up of the unit, flinging slurry off the wad of debris and occasionally dislodging some of the debris from the inlet, if the conveyance pump was turned off. The conveyance vacuum could generally retain the debris on the inlet. This behavior is not thought likely to compromise the field performance of the EE. The overspeed episodes are brief and the speed varies quickly, so harmonic excitation of the deployment manipulator should not be severe.

4.2.2.6 Vibration and Forces

The forces and moments produced by the operation of the SREE were detected by a 6-axis force-moment (F-M) sensor located in the same position relative to the SREE as the F-M sensor in the MLDUA tool interface plate. The bracket connecting the SREE to the F-M sensor was designed to have approximately the weight and estimated stiffness of the MLDUA Gripper End Effector. The three observed resonant frequencies for the SREE mounted on the bracket were 9.5, 22, and 55 Hz. The F-M data was sampled and recorded at 200 Hz by the data acquisition system. The GSEE assembly has not been tested for vibration.

Postprocessing of the data included plotting the raw data and performing harmonic analysis of segments of interest.

The peak forces and moments were occasionally in excess of the allowable static loads for the MLDUA (but never exceeded the capacity of the force-limiting link in the HTB manipulator). The peak forces were quasi-static, imposed by the manipulator trying to force the end effector through stiff sludge, into the tank floor, or over gravel trapped under the inlet. The MLDUA, being much more flexible than the HTB manipulator, would simply flex to relieve the latter loads, and overloading due to inappropriate actions would trip the force limiters in the MLDUA.

Harmonic loads were analyzed using a Fast Fourier Transform which returns a 2 x n matrix of scaled amplitudes c_j, corresponding to frequencies f_j where

$$c_j = \frac{2}{n}\sum_{k=0}^{n-1} v_k e^{2i\pi(j/n)k} \quad \text{and} \quad f_j = \frac{kf_s}{n}$$

where n is the number of elements in the vector v of sampled data (padded out with dummy zero elements to make n an integer power of 2), the frequency corresponding to amplitude c_j is f_j, and f_s is the sampling frequency. Since f_s was 200 Hz, the maximum value possible for f_j is 100 Hz. Amplitudes for 2×10^3 discrete frequencies were calculated between 0 and 100 Hz.

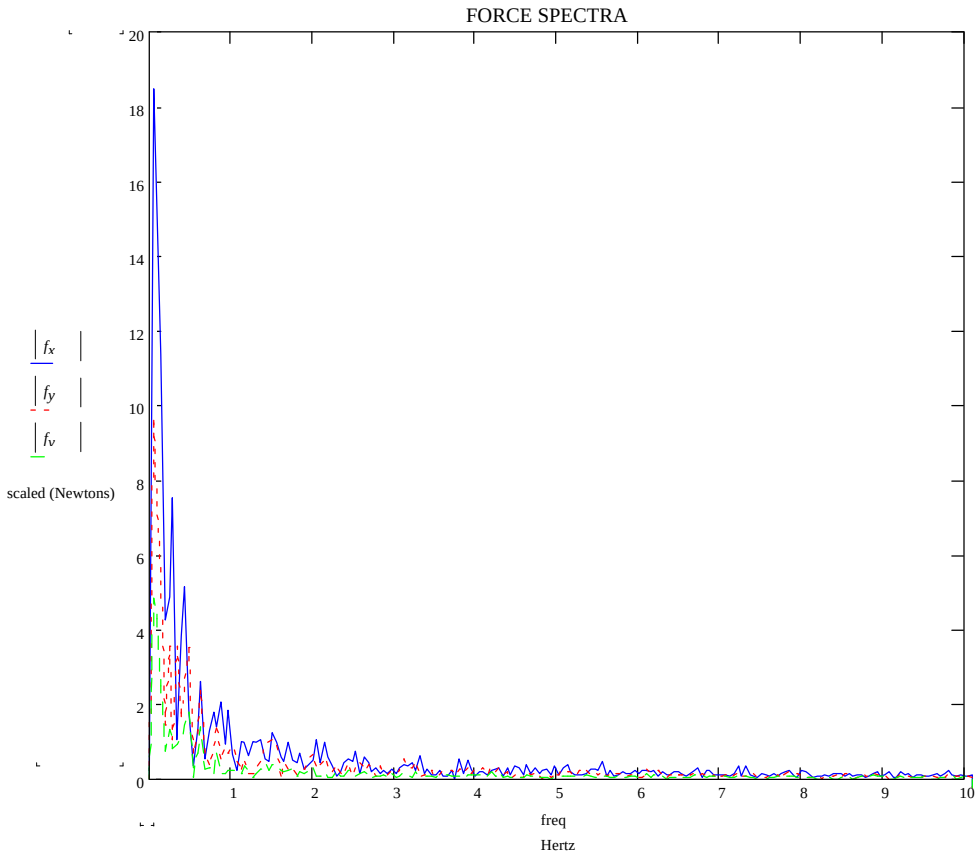

The harmonic loads observed during sludge retrieval testing were modest, characterized by white noise of average amplitude diminishing from about 1-2 lb_f at the lower frequencies to negligible amplitude at frequencies greater than 25 Hz. A spectral analysis plot for a typical retrieval operation is shown in Figure 4.13. A more detailed presentation of the analysis of a typical sludge retrieval test and summary frequency response graphs are found in Appendix 1 and in an internal memo report to M. W. Rinker from J. Smalley. [(a)]

Figure 4.13. Typical Spectral Analysis of Forces for SREE Retrieving Sludge Simulant Test Sludge 11

The harmonic forces observed in the HTB retrieval testing were deemed an acceptable risk to the MLDUA by the ORNL GAAT-TS custodians of the MLDUA, even though the peak forces and moments measured were occasionally in excess of the allowable static loads. The success of the SREE testing on the MLDUA has validated that interpretation.

(a) Smalley, J. 1996. "Force/Torque Data Analysis from HTB at PNNL," memo report to M. W. Rinker.

4.2.3 ORNL Cold Test Facility SREE Testing

The SREE has been successfully deployed in the ORNL GAAT-TS Cold Test Facility by both the MLDUA and the Houdini ROV (Figure 4.14). Very little quantitative data have been collected or made available to PNNL by the GAAT-TS. ORNL has been struggling with integration of at least five complex sub-systems comprising the retrieval system, and has had little opportunity to prepare formal documentation of the testing results. In December 1996, a successful demonstration of the SREE on the MLDUA was conducted for numerous reviewers and other interested parties in the DOE and commercial communities. Subsequently, various deployment system elements have been changed out or repaired and numerous issues have been resolved. The SREE has reportedly been trouble-free during the testing to date, with some minor exceptions noted below.

Figure 4.14. Sludge Retrieval at ORNL TT-CTF; SREE on the MLDUA, Assisted by the Houdini ROV

4.2.3.1 Sludge Retrieval

Simulant. ORNL is using a much larger test tank than was possible at the HTB, about 20 x 40 feet in plan and 25 ft deep from the surface. Therefore it is not practical for the simulant to be replaced after each test. The simulant was initially very similar to the "representative " sludge simulant used for the HTB testing, however water (and hydraulic fluid, small parts, sweat and tears) has been added and slurry pumped out, the ROV and technicians have agitated the bed repeatedly, and the removed slurry has been settled, re-mixed and returned to the test cell, so the composition has varied widely over the course of the 9 months of testing.

Test Results. Extensive sludge retrieval operation experience has been gained in SREE/conveyance system testing and corollary to testing of the other GAAT-TS systems. The SREE has been used on the Houdini ROV (Figure 4.15) to clean two approximately 5' x 10' patches of the test cell floor down to bare concrete with good results. (verbally reported to PNNL by ORNL). It has also been tested extensively on the MLDUA to clean the test cell walls and to retrieve sludge from the floor and in corners.

Scarifying. The SREE has been tested for scarifying with the same gunite simulant used for testing the riser core drilling machine, and on the test cell walls (Figure 4.16). The results were comparable to those obtained at the HTB, confirming the need for a higher-pressure version - the GSEE.

Maintenance. No comments have been received from ORNL regarding maintainability of the SREE.

Figure 4.15. SREE Deployed with the Houdini ROV

Figure 4.16. Scarifying with the SREE in the ORNL TT-CTF

The double-lip seal and seal face(Items 15, 18; Drawing 81937S3) between the rotating manifold/inlet shroud and the stationary main chassis exhibited noticeable wear after a few tens of hours of testing (Figure 4.17). This seal functions to inhibit airflow that bypasses the intended flow path through the inlet shroud into the inlet area above the manifold. It is exposed to the waste on both sides and has a diameter of about 6.5”. A tight seal would slightly improve the efficiency of the conveyance system. The double lip seal had been installed without the O-rings (Items 16, 17; Drawing 81937S3), designed as elastic elements to maintain pressure between the seal lips and the seal face, since the seal proved to be too stiff and induced far too much friction with the O-rings.

Alternative seal designs were considered and estimates ranging upward from ~$400 per seal were obtained for several designs. The worn seal did not appear to compromise performance of the unit and since resources were limited the decision was taken to leave it as-is unless performance is noticeably degraded. The two modes foreseen in which degradation of the double lip seal might affect the SREE are 1) excessive leakage of air through the gap, to the point where conveyance performance is perceptibly diminished, and 2) an increase in friction due to accumulation of viscous waste in the seal gap where a high shear rate over a fairly significant area might result in unacceptable load on the motor.

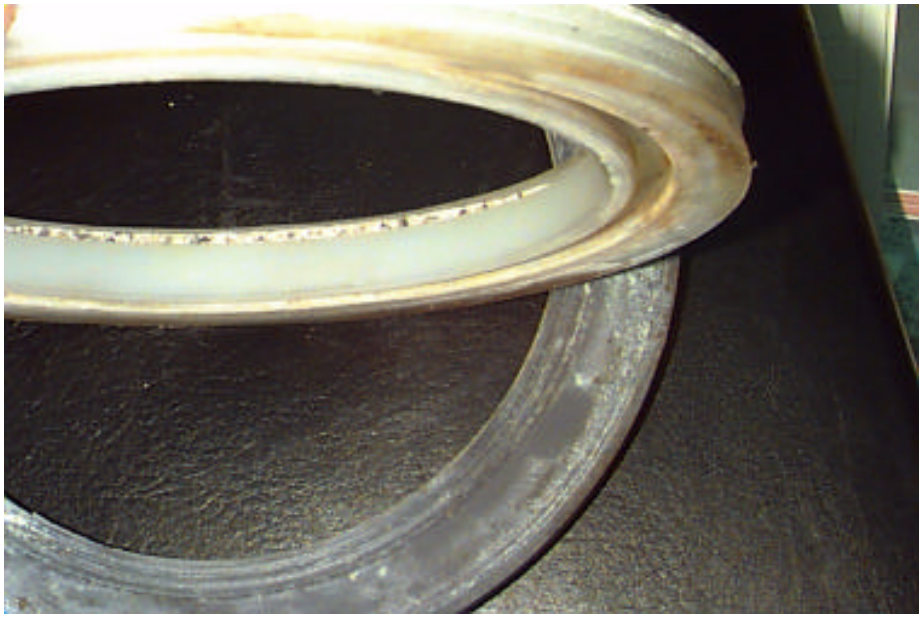

Figure 4.17. Worn Double-Lip Seal

4.2.3.2 Deployment Testing

Manipulation Issues

Vibration and Forces. Forces induced by the operation of the SREE and the conveyance system have not caused any problems reported to PNNL to date. In the first test with the SREE mounted on the MLDUA (Figure 4.18), a low-frequency oscillation began as the SREE was lowered to near the surface. The source was later traced to wind-induced motion of the MLDUAs Vertical Positioning Mast (VPM) housing, which excited the base of the MLDUA. Wind-induced vibration was a significant problem for the operators since they could not predict its occurrence and the low frequency and significant amplitude resulted in swaying motions of the GEE camera. An operator closely focusing on that camera view while trying to grasp the SREE or another object could become motion sick and/or frustrated by the effect. ORNL has added external guying to the MLDUA VPM housing to mitigate the effect, which was due to vortex shedding from the large reactor containment dome adjacent to the TTCTF. It should be noted that such significant wind effects have not been observed on test deployments of the LDUA.

Standoff Distance. Maintaining a small standoff distance from the tank floor to the inlet shroud is essential to the operation of the conveyance system. Too much standoff results in poor scavenging on the final passes as the velocity of air through the gap between the inlet shroud perimeter and the floor is reduced to less than the critical velocity needed to for mobilize the liquid/slurry off the floor.

ORNL has furnished no comments on the ability of the deployment systems to maintain adequate control over the standoff distance, but the favorable reports on overall retrieval performance suggest that it has not been a serious problem.

Figure 4.18. SREE on the MLDUA, from Overview Camera with Hose Management System at Right

Traverse Rate. Significant variation in the traverse rate could compromise performance if the inlet shroud is forced into the sludge faster than the jets can cut clearance and slurry the waste for aspiration by the conveyance system. Significant oscillation of the arm or kinematic control problems could cause such variation. No comments have been received by PNNL on this issue.

Containment of Overspray. For effective cleaning, the process should not splatter waste back into previously cleaned areas. On the smooth floor of the HTB little splatter was observed and the final result was a very well-cleaned floor. However, the irregular concrete surfaces of the gunite tanks may be a different case. No comments have been received by PNNL on this issue.

Scarifying jet velocity is very high and a considerable amount of water and dislodged gunite is ejected. The conveyance system will not be operated with the GSEE (there is no conveyance port on it), and will probably not be effective with the SREE when operating at high pressure, since the momentum of the jets and ejecta is much greater than can be overcome by the inlet airflow. Some ejecta will be captured - the very fine spray and smaller particles - but the cost in terms of conveyance jetpump motive water makes such operation inadvisable unless dilution of the particular waste is desirable. The intended mode for scarifying operations is to perform the scarifying over areas previously cleared of most sludge, then to use the SREE or a simple vacuum nozzle on the conveyance line to pick up the debris.

A concern which is still unresolved is whether or not the scarifying operation will produce so much spray that visibility inside the tank will be obstructed. The testing experience with scarifiers at WTI and the HTB indicate that this may be a problem to some degree but that it probably won't seriously impede operations (Figures 4.16 and 4.19). Operating the conveyance system while running the SREE at high jet pressures would reduce the mist somewhat, but with the jets opposing the airflow at the SREE inlet, the net airflow would probably be inadequate to help much, and operating the conveyance system would exacerbate the overall dilution of the waste retrieved.

4.3 Gunite Scarifying End Effector Development

The ORNL GAAT-TS management decided that it would be advantageous to deploy two different end effectors simultaneously - one retrieving sludge and the other scarifying first the tank walls then the areas of the floor that had been cleared of sludge. Since the second end effector would require a second controller and utility system, the decision was taken to optimize its design for scarifying, building on the basic SREE chassis and motor modules. The incremental cost of a higher-pressure pumping system was to be considered and weighed against the higher water flow requirements for lower pressure scarifying. The end effector specialized for gunite scarifying was dubbed the Gunite Scarifying End Effector (GSEE).

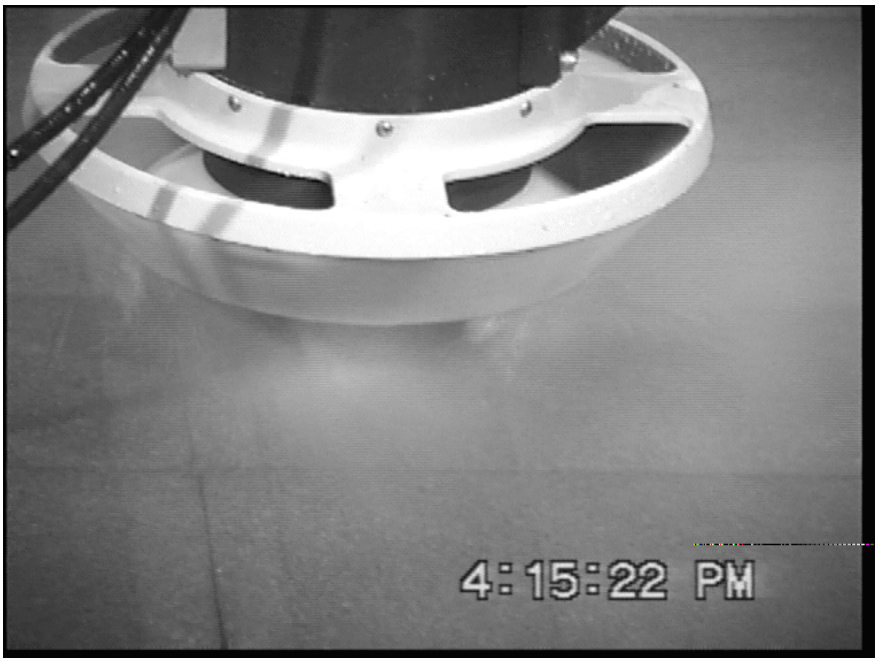

WTI was directed to start a series of scarifying tests with a gunite simulant using the High Pressure Half-Scale Scarifier (HPS - developed by WTI in FY95 for Hanford tank saltcake waste retrieval) as a test fixture. The HPS nozzle array is somewhat variable - with three nozzle radial positions - and would fit nicely within the space available for the GSEE manifold. The operating parameter ranges of the HPS include those possible for the GSEE so the HPS made for a suitable and economical test apparatus.

Figure 4.19. Mist Generation While Scarifying

The following discussion covers the testing of the HPS model of the GSEE. The GSEE has been designed, fabricated and assembled but has not yet been tested on gunite. The results presented here are for the HPS in GSEE configuration only.

The test parameters for the WTI tests are tabulated in Table 4.6.

Very little characterization data was available on the gunite tank structures so selection of suitable simulants for testing was necessarily somewhat arbitrary.

The simulants used for the HTB SREE scarifying tests in the summer of 1996 were two grades of commercially available concrete paver tiles, one having standard 3/8” minus gravel aggregate and the other having 3/8” minus lightweight (pumice) aggregate. These simulants were chosen on the basis of cost and convenience to provide a reasonable approximation of unknown gunite properties

For the WTI testing for the GSEE design, conducted in December 1996, gunite simulants were specified and prepared on the basis of the little bits of information about the tank gunite discovered in the interim since the HTB SREE testing. For tests 1-16, the formula used was

Type II Portland Cement	22 lb
Fine Aggregate (ASTM C33)	66 lb
Pozzutec 20 accelerant	130 ml
Water	11 lb (adjusted for aggregate moisture)

Inconsistencies in the strength of the first 16 batches led to a revision of the formula on advice of the accelerant manufacturer:

Type II Portland Cement	22 lb
Fine Aggregate (ASTM C33)	66 lb
Pozzutec 20 accelerant	500 ml
Water	8.4 lb (adjusted for aggregate moisture)

Aggregate and cement were mixed for 3 minutes in a commercial mixer. After a 1-minute stop, the mixer was restarted and the accelerant and water (pre-mixed) were added over a 1-minute period. The simulant was mixed for one more minute, then cast and cured at 70 °F for four or five days (recorded on the data sheet). The mixture was cast in a plastic mold about 15” x 32”, with a finished thickness of about 2.5”. Cores were drilled from each slab on the day each was used for testing and tested for compressive strength by a certified testing lab. The strength of the revised formula was considerably greater than that of the original, but still not very consistent. (4184 psi - 5715 psi). This simulant was used through test 44.

(Landscape Table 4.6. Gunite Scarifying Test Data - STI Tests)

(Landscape Table 4.6, page 2)

(Landscape Table 4.6, page 3)

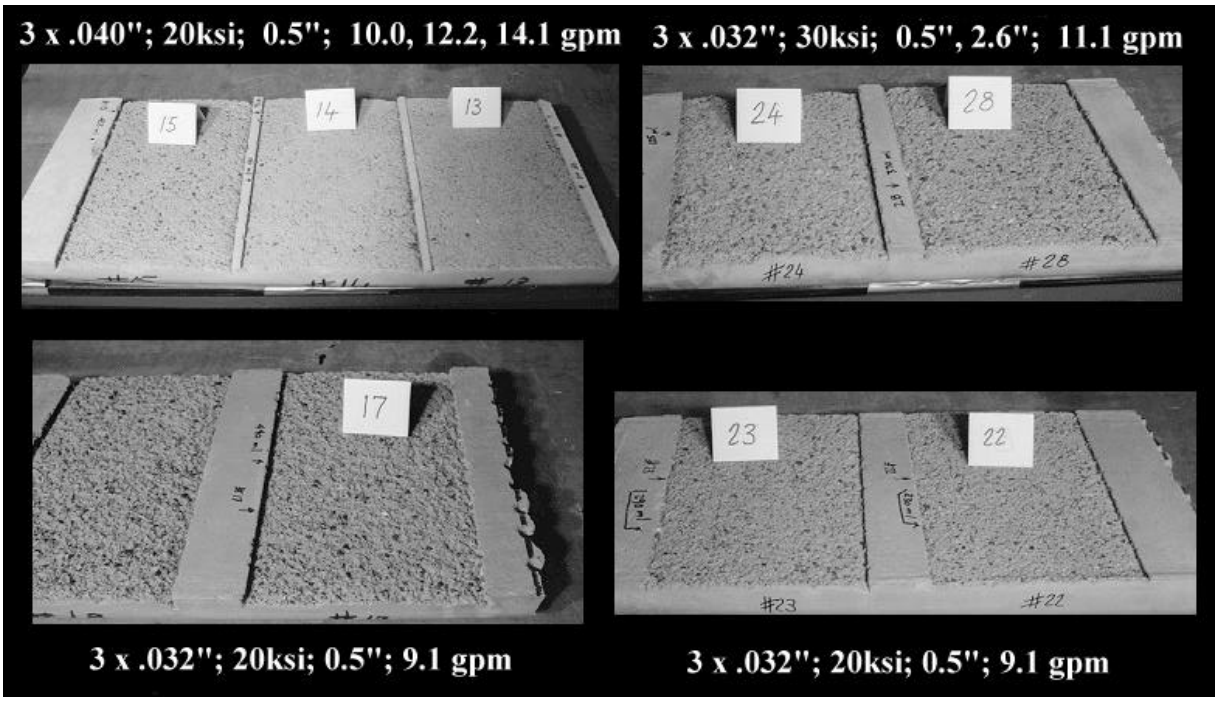

Some 1981 tank wall sampling data (Huggins 1981) was discovered by ORNL and transmitted to PNNL on December 17, 1996. Full details of the test procedure were not provided in the documentation. The samples were taken from the centers of the domes on tanks W-5 and W-10. The samples were evidently tested in a compression test apparatus since stress-strain plots were attached for a few samples. For tank W-10, the mean strength of the samples is 9109 psi, with standard deviation of 1475 psi. For W-5, the figures are 13077 psi and 1822 psi. A letter dated August 27, 1981, attached to the reference, mentions that an earlier test on tank W-10 samples using the Schmidt hammer yielded readings in the 3400 - 7500 psi range.

In December 1996, PNNL personnel visually inspected the cores taken from the domes of W-3 and W-4 when the new access risers were installed and observed that the aggregate size was very small - few particles greater than 1/8” were visible. Therefore, the simulant was changed again for tests 45 - 56 to substitute a finer aggregate more representative of the actual gunite. This simulant was cured for only 3 days, so the strength at testing was somewhat lower, as shown in the data table.

4.3.1 Scarifying Test Results

The test parameters and results are presented in Table 4.6. Photographs of some of the test coupons are presented in Figure 4.20. Summaries of the test results are presented graphically in Figures 4.21, 4.22, and 4.23. The limited number of tests and considerable scatter in the data preclude any defensible correlations or formulae, but the general trends in the data are recognizable and agree well with industrial experience.

Figure 4.20 . Scarifier Test Coupons

Figure 4.21. Volumetric Retrieval Rate vs. Jet Pressure

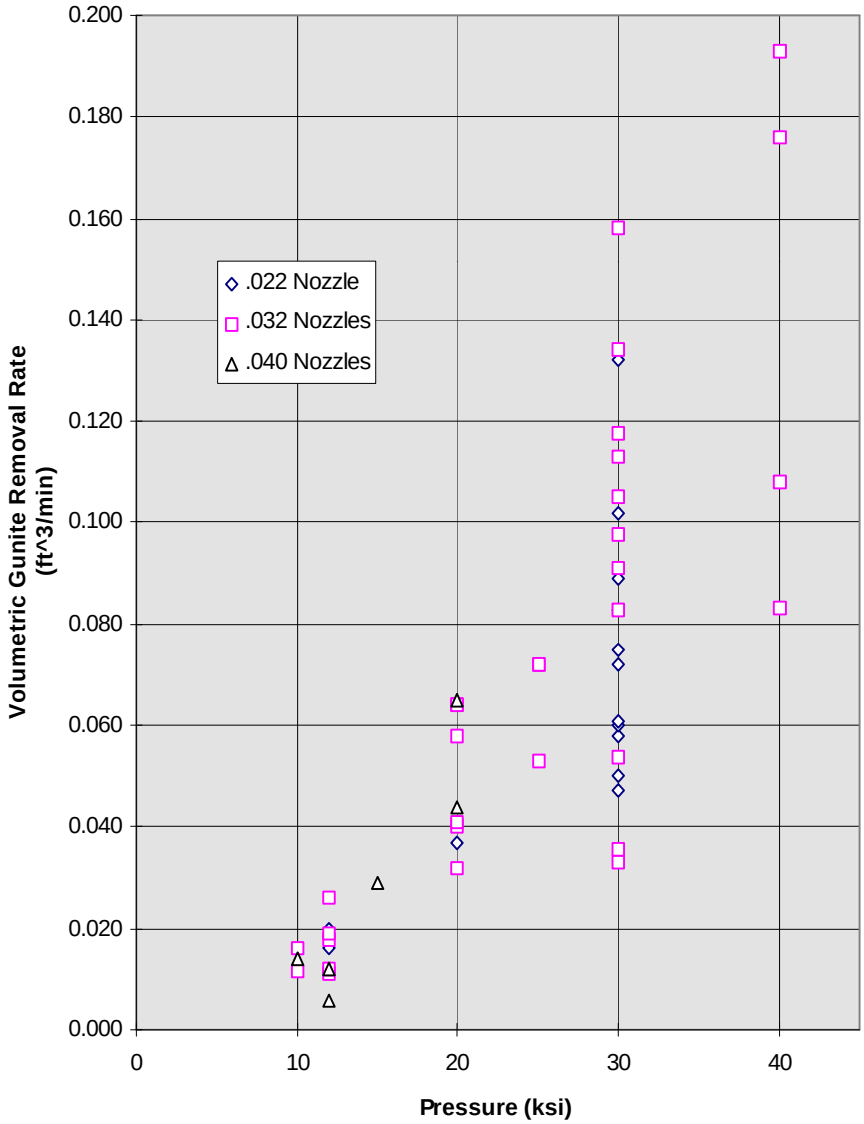

Figure 4.22. Efficiency vs. Jet Pressure

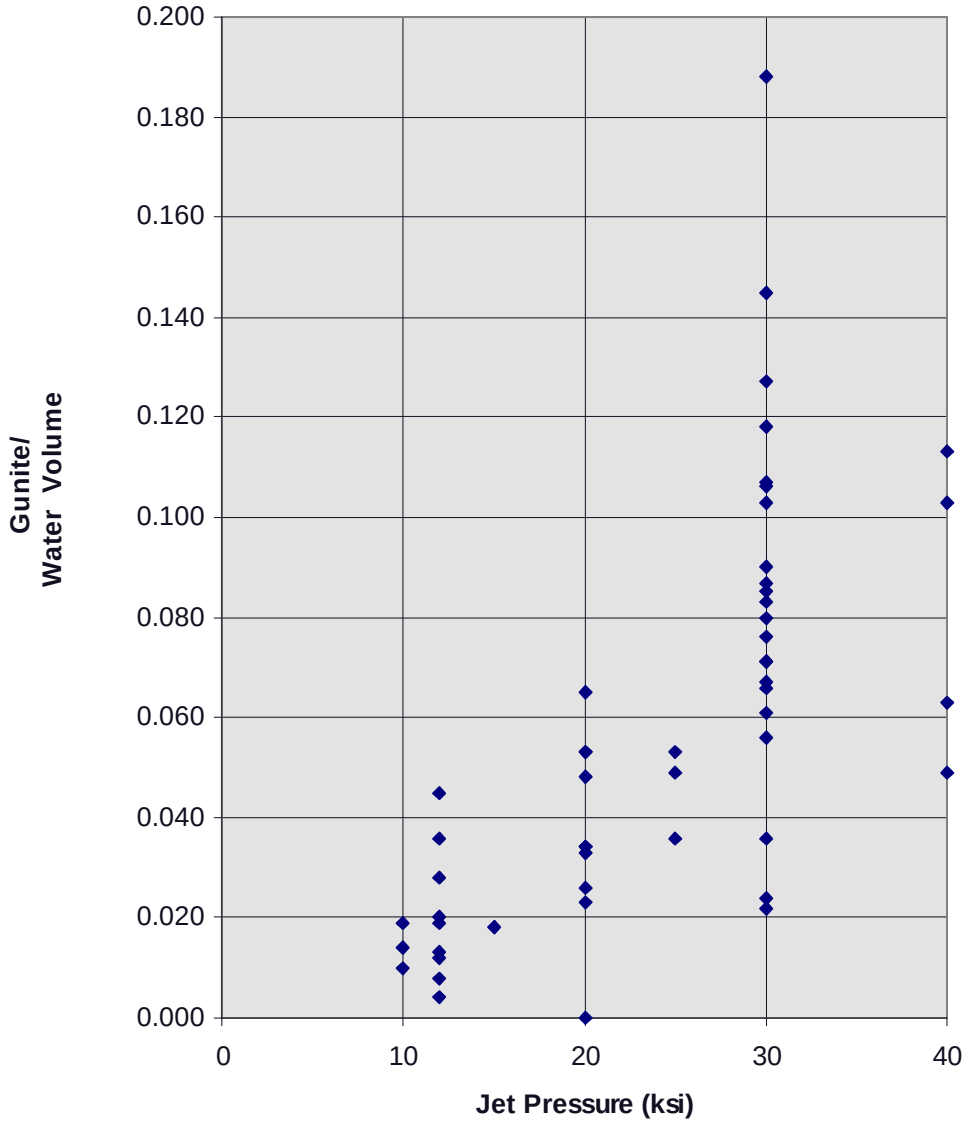

Figure 4.23. Cutting Volumetric Rate vs. Standoff Distance

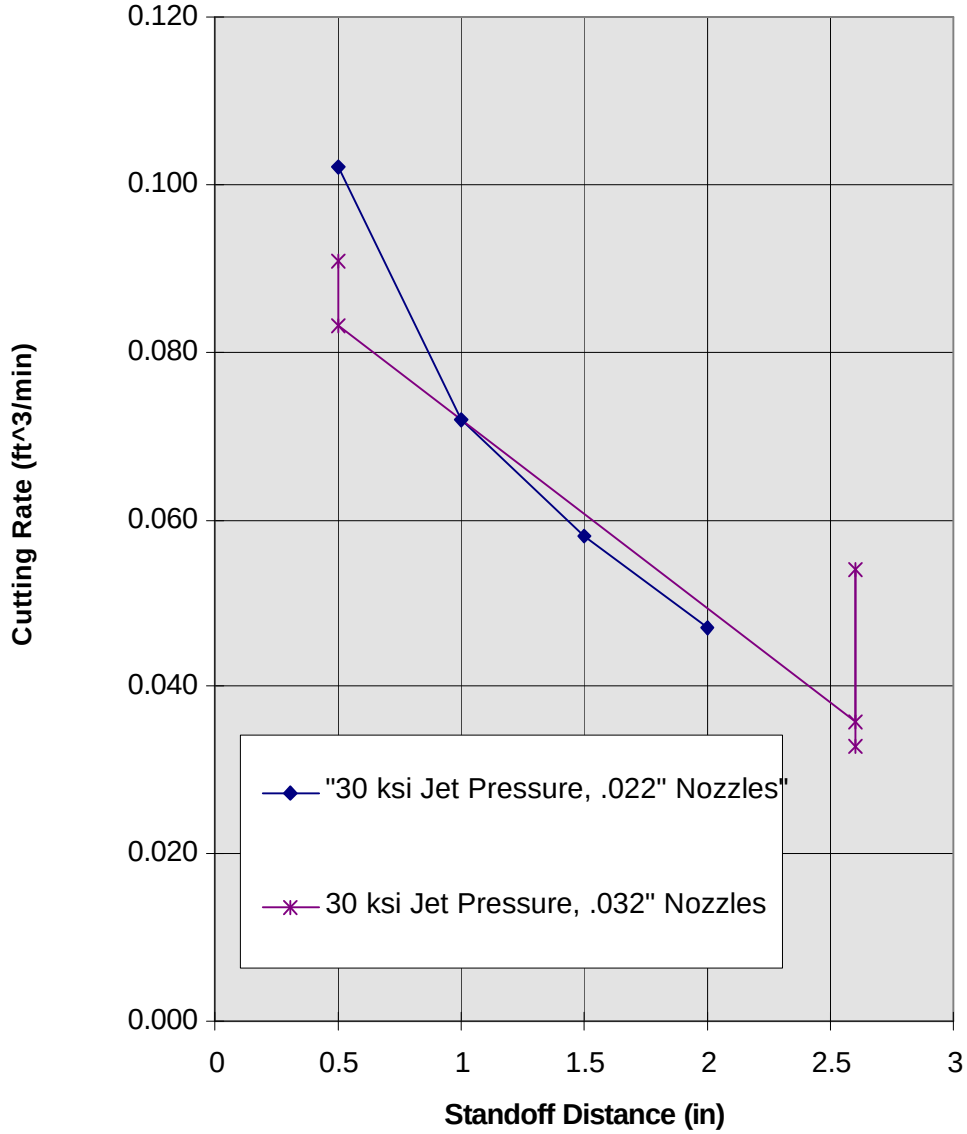

The productivity and efficiency cut per unit of water consumed, ignoring energy) efficiency increase generally with jet pressure, resulting in less dilution of the waste. 30,000 psi is economically attainable with conventional high-pressure pumps, therefore it was chosen as the maximum pressure. working efficiency Greater terms of energy (in consumption water probably possible with even higher pressures, but the costs increase markedly. The thrust from three 0.032" jets at 30,000 psi (68 lb_f, calculated) is too great for the MLDUA to safely handle, so for the final design 0.024" nozzles were chosen (thrust about 38 lb_f). The cutting rate for the 0.022" nozzles tested exceeded the target 0.25" per pass at 1 inch/sec traverse speed in most cases. The smaller nozzles also represent a degree of conservatism regarding the integrity of the tank structures.

The shorter the free jet length or standoff, the greater the efficiency. This suggests that the SREE may be usable as a scarifier at 10,000 psi if the inlet nozzle is replaced with a spare of the GSEE's standoff hub. This would be a quick and simple change and would allow scarifying in two areas at once, using both deployment systems.

The recommendation is that ORNL start scarifying at lower pressures and survey the tank to determine how effective the low pressure is, then increase pressure incrementally until a safe, productive, and manageable pressure is found. It will be important that the GSEE or SREE be kept moving when scarifying since the cut depth increases with repetition of passes (based upon qualitative observation). The mean kerf depth observed in the tests is the product of single jet paths closely spaced, with a number of crossing paths and the benefit of the fracturing off of a significant amount of the material left between cuts. If the end effector is stationary and spinning at 600 rpm, cuts will be repeated at the rate of 30 cuts per second in one spot. While the cut rate will decay with depth, as the jet length increases and the cut wall influences the shear rate at the jet boundary, it is still possible that a degraded tank wall could be breached in a short time by a stationary scarifier.

Figures 4.21 through 4.23 show the results of the WTI scarifier testing using the LWS as a GSEE mock-up.

4.0 Prototype Development 4.1
4.1 Detail Design 4.1
4.1.1 Functions and Requirements 4.1
4.1.2 Design Basis 4.2
4.1.3 Deployment 4.2
4.1.4 Features 4.3
4.2 Prototype Testing 4.6
4.2.1 Acceptance Testing 4.6
4.2.2 HTB Testing 4.8
4.2.3 ORNL Cold Test Facility SREE Testing 4.18
4.3 Gunite Scarifying End Effector Development 4.23
4.3.1 Scarifying Test Results 4.29

Figures

4.1. SREE in the Service Vise 4.1
4.2. Needs Title 4.3
4.3. GSEE Manifold Assembly 4.4
4.4. Submerged Operation Test 4.7
4.5. Water Spray Decontamination Wash Test 4.7
4.6. HTB Gantry Manipulator with SREE (CSEE) 4.8
4.7. End Effector Path, Test Sludge 11 . . . . . 4.10
4.8. SREE Sludge Retrieval Test in the HTB 4.11
4.9. Sludge Retrieval Data Plot - # Sludge 11 . . . . . 4.12
4.10. SREE Scarifying Test in the HTB 4.13
4.11. Maintenance Test 4.14
4.12. SREE Lifting Debris 4.15
4.13. Typical Spectral Analysis of Forces for SREE Retrieving Sludge Simulant Test Sludge 11 . . . . . 4.17
4.14. Sludge Retrieval at ORNL TT-CTF; SREE on the MLDUA, Assisted by the Houdini ROV 4.18
4.15. SREE Deployed with the Houdini ROV 4.19
4.16. Scarifying with the SREE in the ORNL TT-CTF 4.20
4.17. Worn Double-Lip Seal 4.21
4.18. SREE on the MLDUA, from Overview Camera 4.22
4.19. Mist Generation While Scarifying 4.23
4.20. Scarifier Test Coupons 4.29
4.21. Volumetric Retrieval Rate vs. Jet Pressure 4.30
4.22. Efficiency vs. Jet Pressure 4.31
4.23. Cutting Volumetric Rate vs. Standoff Distance 4.32

Tables

4.1. SREE/GSEE Operating Parameters 4.5
4.2. Sludge Retrieval Test Parameters 4.9
4.3. Sludge Test 11 Parameters 4.10
4.4. Sludge Retrieval Performance Summary - Test # Sludge 11 . . . . . 4.11
4.5. SREE Scarifying Test Parameters 4.13
4.6. Gunite Scarifying Test Data - STI Tests 4.25
4.7. Gunite Scarifying Test Data - WTI Tests 4.27

5.0 Conclusions

The basic features of the UM-R CSEE conceptual design were refined and executed in the SREE by WTI, who delivered a solid and well-built piece of equipment. Most of the conceptual design features worked substantially as expected once the design had been refined. Jet momentum cancellation and the rotation speed envelope did not work as expected but proved not to be very significant. Sludge retrieval performance in both the HTB and the TTCTF turned out to be quite satisfactory even with difficult simulants.

SREE scarifying performance was not up to expectations, and, in retrospect, could have been predicted more reliably and should have been tested more thoroughly at the test-article stage. The resolution - a specialized scarifying end effector variant (the GSEE) operated at higher pressures would have probably been the same, but it would have been better to have foreseen that development earlier in the program.

The SREE has presented no unforeseen difficulties for operators in terms of controls, functionality, decontamination or maintenance.

The ORNL CCTF testing has included successful integration of the SREE with both manipulator systems (The MLDUA and the Houdini ROV) and with the balance of plant (conveyance system, flow control system and process piping mock-up). Compatibility with the MLDUA was the greatest source for concern. An early analysis by SPAR Aerospace of the MLDUA capacity for harmonic excitation was probably overly conservative (and SPAR had presented it as a conservative approach); the force-moment spectrum produced by the SREE in testing violated the allowable loading predicted by the SPAR analysis but no vibration problems due to the end effector were reported from test operations.

On the basis of the testing done to date on cold simulants, the SREE can be deemed to be a successful waste retrieval technology development exercise. Judgment must be reserved on the GSEE pending testing of the unit at ORNL. In both cases, the development and performance testing has been done with conservative simulants formulated on the basis of very limited characterization of the wastes and gunite tank surfaces. Hot deployment at the ORNL North Tank Farm in June 1997 will finally resolve the question of simulant validity and test the real-world utility of the retrieval end effectors.

6.0 References

Golcar, G. R., J. Bontha, J. Darab, M. R. Powell, P. Smith, and J. Zhang. 1997. *Retrieval Process Development and Enhancements Project Fiscal Year 1995 Simulant Development Technology Task Progress Report*, Pacific Northwest National Laboratory, Richland, Washington.

Hatchell, B. K., M. W. Rinker, and O. D. Mullen. 1995. *Hazardous Waste Retrieval Strategies Using a High Pressure Water Jet Scarifier*, "Proceedings of the 8th American Water Jet Conference, Water Jet Technology Association," St. Louis, Missouri.

Hatchell, B. K., O. D. Mullen, T. A. Stewart, and J. A. Yount. 1994. "Functions, Requirements and System Description; Hydraulic Testbed for Full-Scale Testing of Waste Dislodging and Conveyance Processes" (PNL & WHC).

Hatchell, B. K., O. D. Mullen, and J. A. Yount. 1994. "Experimental Objectives, Test Program and Data Requirements; Hydraulic Testbed for Full-Scale Testing of Waste Dislodging and Conveyance Processes," (PNL & WHC).

Huggins, J. D. 1981. Engineering Transmittal: letter from D.J. Naus - Tank W-5, W-10 gunite specimen strength

Mullen, O. D. 1996. *Equipment Specification for a Confined Sluicing End Effector for the Gunite and Associated Tanks Treatability Study*, WHC-S-0464. Westinghouse Hanford Company, Richland, Washington.

Mullen, O. D. 1997. *Equipment Specification for a Gunite Scarifying End Effector for the Gunite and Associated Tanks Treatability Study*, PNNL-11542. Pacific Northwest National Laboratory, Richland, Washington.

Mullen, O. D., and J. Potter. 1995. *Functions and Requirements for a Waste Dislodging and Conveyance System for the Gunite and Associated Tanks Treatability Study at Oak Ridge National Laboratory*. WHC-SD-WM-FRD-024 Rev. 0, Westinghouse Hanford Co. Re-issued as PNNL-11492, D01743-F&R01, 1997. Pacific Northwest National Laboratory, Richland, Washington.

Powell, M. R. 1994. *USTID Waste Dislodging and Conveyance FY 1993 Technology Development Summary Report*. PNL-9787, Pacific Northwest Laboratory, Richland, Washington.

Randolph, J. D. 1997. *Development of a Waste Dislodging And Retrieval System For Use In The Oak Ridge National Laboratory Gunite Tank*, Oak Ridge National Laboratory, Oak Ridge, Tennessee.

Rinker, M. W., O. D. Mullen, and B. K. Hatchell. 1995. *Waste Dislodging and Conveyance Testing Summary and Conclusions to Date*. PNL-10095, Pacific Northwest Laboratory, Richland, Washington.

Rinker, M. W., O. D. Mullen, B. K. Hatchell, D. Summers, and D. Alberts. 1996. *Confined Sluicing End Effector for Retrieval of Sludge Wastes in Gunite Tanks at the Oak Ridge National Laboratory*, Pacific Northwest National Laboratory, Richland, Washington.

Summers, D. A., R. D. Fossey, G. Galecki, and M. McLaughlin. 1995. *Medium Pressure Waterjet Mining and the Development of Confined Sluicing End Effectors*, University of Missouri-Rolla.

Summers, D. A., R. D. Fossey, M. D. Mann, and J. G. Blaine. 1994. *Hazardous Waste Dislodging and Conveyance: The Confined Sluicing Method*. PNL-10074, Pacific Northwest Laboratory, Richland, Washington.

Waterjet Technology Inc. 1997a. Drawing 81937S2-Rev B - Motor Can Assembly.

Waterjet Technology Inc. 1997b. Drawing 81937S3-Rev A - Bearing Carrier Assembly.

Appendix A

Harmonic Forces Generated by the SREE

Appendix A

Harmonic Forces Generated by the SREE

A.1 Background

The two deployment systems planned for use in GAAT-TS waste retrieval operations entail supporting the SREE on a robotic or teleoperated arm having significant flexibility, and, therefore, susceptibility to harmonic excitation. The MLDUA/VPM was predicted to have first-mode frequency of 0.4-1.5 Hz, depending on the configuration. The frequency for the Schilling Titan II arm initially used on the Houdini ROV was not determined. It was regarded as being very stiff, and short enough that oscillations would pose no problems.

The MLDUA extends up to 17 ft from the shoulder to the center of the SREE. The shoulder is mounted to the end of the Vertical Positioning Mast (VPM), which extends up to 37 ft from its base. The VPM base is a set of roller bearings riding on tracks in the VPM housing. The whole structure sits on an adjustable four-legged deployment table straddling the tank riser interface box (TRIC). The VPM housing stands some 44 ft tall, from the tank platform.

The MLDUA terminates in a two-part Tool Interface Plate (TIP), to the distal part of which a Gripper End Effector (GEE) is mounted. The GEE in turn grasps the SREE by one of the X-handles. There is a force-moment (F-M) sensor in the MLDUA side of the TIP. Load constraints on the MLDUA system were specified by Spar Aerospace as being applied at the TIP.

A.2 Testing and Analysis

The SREE was mounted in the HTB using a stiff bracket, the base of which was mounted to a F-M sensor, which was in turn mounted to a 90 $^{\circ}$ bracket. The offset from the F-M sensor to the SREE centerline was equal to that provided by the GEE. The output from the F-M sensor was sampled at 200 Hz during testing. Prior to retrieval testing, the mounting dynamics were characterized by impact loads applied to the end effector. The system exhibited resonant frequencies of about 12.5 Hz and 32 Hz, both well outside the range of interest.

The following pages show the calculations performed on samples of the data taken during test Sludge 4, and presents a summary of calculations performed on eight scarifying tests and five sludge retrieval tests. Test parameters are given in the text. Sludge 4 was a fairly typical test which proceeded smoothly and occasioned no off-normal behavior.

Two analyses were performed on each data set. First, a moving average filter was applied to verify that the average values later subtracted from the data were representative. Second, a spectral analysis was performed using the Mathcad™ implementation of the real-data fast Fourier transform (FFT). The result was scaled by $2n^{-1/2}$, to Newtons of force or Newton-meters of torque. The transform and scaling factor were tested on synthetic data.

A.3 Results

The average forces and peak forces recorded were well within the static load capacity of the MLDUA. The torque data recorded were not accurate and were considered only for diagnosis of spectral elements attributable to electronic noise.

The 12.5 Hz resonance of the mounting system is hardly identifiable in the test spectra plots, probably having been damped out by the sludge, cables and hoses attached to the EE. A weak 6 Hz signal is evident in the Y- and Z-axis force and torque data. It is attributable to electrical noise from the 12-pole dc servomotor in the SREE, running at 60 rpm (6 pole pairs x 1 Hz = 6 Hz). The EE rotational frequencies can be distinguished in the scarifying tests where the end effector made no contact with simulant, but are not so distinct in the sludge retrieval tests. No other distinct force or torque signals were observed in the frequency range of interest. The quasi-static forces (<1 Hz) were apparently very modest, as were the peak absolute forces. No evidence was seen that the normal operation of the SREE would jeopardize its deployment on the MLDUA.

Off-normal events associated with debris in the waste were simulated in the HTB. Unfortunately, the F-M data from those tests is unreliable, due to faulting instrumentation. When debris is captured on the SREE inlet screen, it is usually eccentric to the axis of rotation, and therefore can be expected to impart an excitation force proportional to its mass at the rotational frequency of the device. As long as the debris is kept in the sludge, oscillations will be damped to a considerable extent. If the SREE is lifted out of the sludge while spinning with debris attached, oscillations of the arm may occur and may rapidly increase in amplitude if the EE rotation is at a modal frequency for the EE/arm system. This behavior was not reported to occur during the ORNL testing.

Table 4.6. Gunite Scarifying Test Data - WTI Tests

Gun Run No.	Cure Time (day)	Noz Size (.001")	Noz Pres (ksi)	SOD (inch)	Kerf (inch)	rpm	Noz Flow (gpm)	No. of Pass	Cut Length (in/min)	Trav Rate (in/min)	Kerf Vol (ml)	Vol Rate (ft^3/min)	Eff (V/Q)	Date	Sample No.	Equiv. Kerf Depth (inch)	Comp. Strength (psi)
1	4	32	<10	0.5	8.9	650		1	14.5	60		Not Measured		11/29	Slab #1 11/25		Not tested
2	4	32	<30	0.5	8.9	650		1	14.5	60		Not Measured		11/29	Slab #1 11/25		
3	4	32	40	0.5	8.9	650	12.82	1	14.5	60	740	0.108	0.063	11/29	Slab #1 11/25	0.35	
4	5	32	10	0.5	8.9	650	6.41	1	14.5	60	80	0.012	0.014	12/02	Slab #1 11/27	0.04	3315 ave.
5	5	32	30	0.5	8.9	650	11.10	1	14.5	60	670	0.098	0.066	12/02	Slab #1 11/27	0.317	
6	5	32	40	0.5	8.9	650	12.82	1	14.5	60	1320	0.193	0.113	12/02	Slab #1 11/27	0.624	
7	4	32	10	0.5	8.9	300	6.41	1	14.5	60	110	0.016	0.019	12/02	Slab #2 11/28	0.052	3225 ave.
8	4	32	30	0.5	8.9	300	11.10	1	14.5	60	805	0.118	0.080	12/02	Slab #1 11/28	0.381	
9	4	32	40	0.5	8.9	300	12.82	1	14.5	60		Not Measured		12/02	Slab #1 11/28		
10	4	32	40	0.5	8.9	300	12.82	1	14.5	60	1205	0.176	0.103	12/02	Slab #2 11/28	0.57	
11	4	32	30	2.6	10.1	650	11.10	1	14.5	60	245	0.036	0.024	12/03	Slab #1 11/29	0.102	4700 ave.
12	4	32	40	2.3	10.0	650	12.82	1	14.5	60	570	0.083	0.049	12/03	Slab #2 11/29	0.24	
13	4	40	10	0.5	8.9	650	10.01	1	14.5	60	95	0.014	0.010	12/04	Slab #1 11/30	0.045	3780 ave.
14	4	40	15	0.5	8.9	650	12.26	1	14.5	60	190	0.029	0.018	12/04	Slab #1 11/30	0.09	
15	4	40	20	0.5	8.9	650	14.16	1	14.5	60	435	0.065	0.034	12/04	Slab #1 11/30	0.206	
16	4	40	20	0.5	8.9	300	14.16	1	14.5	60	300	0.044	0.023	12/04	Slab #21 1/30	0.142	

Table 4.6. Gunite Scarifying Test Data - WTI Tests (contd)

Gun Run No.	Cure Time (day)	Noz Size (.001")	Noz Pres (ksi)	SOD (inch)	Kerf (inch)	rpm	Noz Flow (gpm)	No. of Pass	Cut Length (in/min)	Trav Rate (in/min)	Kerf Vol (ml)	Vol Rate (ft^3/min)	Eff (V/Q)	Date	Sample No.	Equiv. Kerf Depth (inch)	Comp. Strength (psi)
17	4	32	20	0.5	8.9	650	9.06	1	14.5	60	440	0.064	0.053	12/05	Slab #1 12/01	0.208	4315 ave.
18	4	32	25	0.5	8.9	650	10.13	1	14.5	60	490	0.072	0.053	12/05	Slab #1 12/01	0.232	
19	4	32	30	0.5	8.9	650	11.10	1	14.5	60	715	0.105	0.071	12/05	Slab #2 12/01	0.338	
20	4	32	20	0.5	8.9	300	9.06	1	14.5	60	275	0.040	0.033	12/05	Slab #2 12/01	0.13	
21	4	32	30	0.5	8.9	300	11.10	1	14.5	60	770	0.113	0.076	12/05	Slab #2 12/01	0.364	
22	4	32	20	0.5	8.9	1000	9.06	1	15	60	230	0.032	0.026	12/06	Slab #2 12/02	0.106	4670 ave.
23	4	32	20	0.5	8.9	1500	9.06	1	15	60	290	0.041	0.034	12/06	Slab #2 12/02	0.134	
24	4	32	30	0.5	8.9	650	11.10	1	14.5	60	625	0.091	0.061	12/09	Slab #1 12/05	0.296	5715 ave.
25	4	32	30	0.5	8.9	300	11.10	1	14.5	60	570	0.083	0.056	12/09	Slab #3 12/05	0.27	
26	4	32	25	0.5	8.9	650	10.13	1	14.5	60	360	0.053	0.036	12/09	Slab #2 12/05	0.17	
27	4	32	25	0.5	8.9	300	10.13	1	14.5	60	495	0.072	0.049	12/09	Slab #2 12/05	0.234	
28	4	32	30	2.6	10.1	650	11.10	1	14.5	60	370	0.054	0.036	12/09	Slab #1 12/05	0.154	
29	4	32	30	2.6	10.1	650	11.10	1	14.5	60	225	0.033	0.022	12/09	Slab #3 12/05	0.094	
30	2	40	12	0.5	8.9	650	10.90	1	14.5	30				12/12	Slab #2 12/10		4830 ave.
31	2	40	12	0.5	8.9	650	10.90	1	14.5	7	700	0.012	0.008	12/12	Slab #2 12/10	0.33	
32	2	32	12	0.5	8.9	650	7.0	1	14.5	7	1060	0.018	0.019	12/12	Slab #2 12/10	0.5	
33	2	32	12	0.5	8.9	650	7.0	1	14.5	30	170	0.012	0.013	12/12	Slab #3 12/10	0.08	
34	2	22	30	0.5	8.9	650	5.25	1	14.5	30	835	0 .061	0.087	12/12	Slab #3 12/10	0.395	
35	2	22	30	0.5	8.9	650	5.25	1	14.5	50	840	0.102	0.145	12/12	Slab #3 12/10	0.4	

Table 4.6. Gunite Scarifying Test Data - WTI Tests (contd)

Gun Run No.	Cure Time (day)	Noz Size (.001")	Noz Pres (ksi)	SOD (inch)	Kerf (inch)	rpm	Noz Flow (gpm)	No. of Pass	Cut Length (in/min)	Trav Rate (in/min)	Kerf Vol (ml)	Vol Rate (ft^3/min)	Eff (V/Q)	Date	Sample No.	Equiv. Kerf Depth (inch)	Comp. Strength (psi)
36	2	22	30	0.5	8.9	650	5.25	1	14.5	100	540	0.132	0.188	12/13	Slab #1 12/11	0.26	4184 ave.
37	2	40	12	0.5	8.9	650	10.90	1	14.5	7	325	0.006	0.004	12/13	Slab #1 12/11	0.154	
38	2	32	12	0.5	8.9	650	7.0	1	14.5	15	300	0.011	0.012	12/13	Slab #1 12/11	0.142	
39	4	22	30	0.5	8.9	650	5.25	1	14.5	30	680	0.050	0.071	12/16	Slab #1 12/13	0.322	4660 ave.
40	4	22	30	0.5	8.9	650	5.25	1	14.5	60	510	0.075	0.107	12/16	Slab #1 12/13	0.241	
41	4	22	30	0.5	8.9	650	5.25	1	14.5	90	275	0.060	0.085	12/16	Slab #2 12/13	0.13	
42	4	22	30	1	9.3	650	5.25	1	14.5	60	490	0.072	0.103	12/16	Slab #2 12/13	0.222	
43	4	22	30	1.5	9.5	650	5.25	1	14.5	60	400	0.058	0.083	12/16	Slab #3 12/13	0.177	
44	4	22	30	2	9.8	650	5.25	1	14.5	60	320	0.047	0.067	12/16	Slab #3 12/13	0.137	
45	3	32	12	0.5	8.9	650	7.00	1	14.5	60	175	0.026	0.028	12/23	Slab #1 12/20	0.083	3353 ave.
46	3	32	20	0.5	8.9	650	9.06	1	14.5	60	435	0.064	0.053	12/23	Slab #1 12/20	0.206	
47	3	32	20	0.5	8.9	650	11.10	1	14.5	60	1080	0.158	0.106	12/23	Slab #2 12/20	0.511	
48	3	22	12	0.5	8.9	650	3.30	1	14.5	60	110	0.016	0.036	12/23	Slab #2 12/20	0.052	
49	3	22	20	0.5	8.9	650	4.28	1	14.5	60	Not Tested						
50	3	22	20	0.5	8.9	650	5.25	1	14.5	60	565	0.083	0.118	12/23	Slab #3 12/20	0.267	
51	3	32	12	0.5	8.9	650	7.00	1	15	60	130	0.019	0.020	12/30	Slab #1 12/27	0.061	3512 ave.
52	3	32	20	0.5	8.9	650	9.06	1	15	60	400	0.058	0.048	12/30	Slab #1 12/27	0.189	
53	3	32	30	0.5	8.9	650	11.10	1	14.5	60	915	0.134	0.090	12/30	Slab #2 12/27	0.433	
54	3	22	12	0.5	8.9	650	3.30	1	14.5	60	135	0.020	0.045	12/30	Slab #2 12/27	0.064	
55	3	22	20	0.5	8.9	650	4.28	1	14.5	60	250	0.037	0.065	12/30	Slab #3 12/27	0.118	
56	3	22	30	0.5	8.9	650	5.25	1	14.5	60	610	0.089	0.127	12/30	Slab #3 12/27	0.288	

Distribution

No. of
Copies

OFFSITE

2 DOE/Office of Scientific and Technical Information

1 D. W. Geiser, EM-50
US Department of Energy
Tanks Focus Area
Cloverleaf Building
19901 Germantown Road
Germantown, MD 20874-1290

1 C. S. Mims, EW-91
US Department of Energy
Oak Ridge Remediation Branch
Environmental Restoration Division
P.O. Box 2001
Oak Ridge, TN 37831

1 B. Burks, MS-6304
Oak Ridge National Laboratory
Telerobotics Systems Section
P.O. Box 2008, Bldg. 7601
Oak Ridge, TN 37831-6304

5 J. Randolph, MS-6304
Oak Ridge National Laboratory
Telerobotics System Section
P.O. Box 2008, Bldg. 7601
Oak Ridge, TN 37831-6304

1 D. Van Hoesen
Oak Ridge National Laboratory
Telerobotics System Section
P.O. Box 2008, Bldg. 7601
Oak Ridge, TN 37831-6304

No. of
Copies

2 D. A. Summers
Waterjet Research Center
University of Missouri-Rolla
Rolla, MO 65401

1 C. Christensen, MSIN 3710
Idaho National Engineering Laboratory
P.O. Box 1625, 2525 Fremont Ave.
Idaho Falls, ID 83415

1 J. H. Lee, MSIN 0734
Sandia National Laboratory
P.O. Box 5800
Albuquerque, NM 87185-5800

2 D. Alberts
Waterjet Technology Inc.
21414 68th Avenue South
Kent, WA 98032

ONSITE

2 DOE Richland Operations Office

J. A. Frey	K8-50
M. J. Glasper	K8-50

3 Project Hanford Management Contract

P. W. Gibbons	H6-12
L. B. McDaniel	H6-12
D. C. Ramsower	H6-12

No. of Copies		No. of Copies
36	Pacific Northwest National Laboratory	
	K. M. Airhart K5-22	
	J. A. Bamberger K7-15	
	W. F. Bonner K8-14	
	J. L. Buelt P7-41	
	E. A. Daymo P7-19	
	C. W. Enderlin K7-15	
	F. F. Erian K7-15	
	B. K. Hatchell K5-26	
	K. L. Johnson K5-26	
	O. D. Mullen (10) K5-22	
	M. R. Powell P7-19	
	M. W. Rinker (10) K5-22	
	B. F. Saffell K5-22	
	J. A. Yount K5-22	
	Information Release (4) K1-06	