PNNL-11703
UC-2030

Descriptive Models for Single-Jet Sluicing of Sludge Waste

F. F. Erian
L. A. Mahoney
G. Terrones

November 1997

Prepared for
the U.S. Department of Energy
under Contract DE-AC06-76RLO 1830

Pacific Northwest National Laboratory
Richland, Washington 99352

Summary

Mobilization of sludge waste stored in underground storage tanks can be achieved safely and reliably by sluicing. In the project discussed in this report, the waste in Hanford single-shell Tank 241-C-106 will be mobilized by sluicing, retrieved by a slurry retrieval pump, and transferred via an 1800-ft slurry pipeline to Tank 241-AY-102. A sluicing strategy must be developed that ensures efficient use of the deployed configuration of the sluicing system: the nozzle(s) and the retrieval pump(s). Without such a strategy, achieving the goals of sludge mobilization and retrieval may be difficult. Given a sluicing system configuration in a particular tank, it is desirable to prescribe the sequential locations at which the sludge will be mobilized and retrieved and the rate at which these mobilization and retrieval processes take place. In addition, it is necessary to know whether the retrieved waste slurry meets the requirements for cross-site slurry transport.

Some of the physical phenomena that take place during mobilization and retrieval and certain aspects of the sluicing process are described in this report. First, a mathematical model gives 1) an idealized geometrical representation of where, within the confines of a storage tank containing a certain amount of settled waste, sludge can be removed and mobilized; and 2) a quantitative measure of the amount of sludge that can be removed during a sluicing campaign. These amounts depend on the nozzle location relative to the waste surface, the nozzle orientation, and the dimensions of the storage tank. The model is geometrical, assumes the jet trajectory to be straight, and contains no dynamics. Further development (planned for FY 1998 and beyond) will focus on estimating the amount of sludge removed as a result of the magnitude and direction of the force of the sluicing jet as it impacts the surface of the waste. For a given tank and sluicing nozzle arrangement, the dislodging rate can then be obtained as a function of the momentum, trajectory, impact angle, and average sweeping speed of the sluicing jet and the physical properties of the waste sludge.

The current model shows that it is not realistic to expect that a uniform sludge layer can be removed from the waste cylinder, considering the geometry and locations of the sluicing jet and the retrieval pump. At best, if the nozzle is mounted on a precision, fast-responding positioning control system, and if it can be raised and lowered such that the sludge can be slowly eroded in a controlled way by the water jet, then the shallowest penetration into the sludge layer at the deep end (where the retrieval pump is located) can be achieved.

A model describing an idealized water jet issuing from a circular nozzle located at a given height above a flat surface is presented in this report. The nozzle is supported at a hinge that allows it to acquire both pitch and yaw motions. The equations of motion are written in the Lagrangian coordinate system, which allows an expression for the jet trajectory to be derived. Both drag and gravitational forces are included in the equations of motion. The magnitude and direction of the impact and the stagnation pressure at the target point where the jet meets the flat surface are estimated for a variety of conditions, including the jet exit velocity, the nozzle pitch angle, and the drag parameters.

This dynamic water-jet model provides the basis for improving the geometrical sluicing model presented next. In this model we assume that the water jet follows a straight trajectory

toward a target point on a flat surface. However, the water jet does not follow a straight line in the actual tank, and using the true trajectory will allow a more accurate estimate of the amount of disturbed material. Also, we hope that developing accurate force and pressure fields will lead to a better description of the scouring process and more realistic material removal rates.

Acknowledgment

This work has been funded jointly by the “Retrieval Process Development and Enhancement” and the “PNNL Technical Support to Project W-320” Projects.

Contents

Summary iii

Acknowledgment iv

1.0 Introduction 1

2.0 Sluicing Model Development 5

2.1 Geometrical Sluicing Model 6
2.2 Numerical Integration 13
2.3 Results and Discussion 13
2.4 The Case of the 2 ft Bologna Slice 16
2.5 General Remarks 19

3.0 Sluicing Jet Model 21

3.1 Dynamics of the Sluicing Jet 21
3.2 Conclusions and Planned Future Work 26

4.0 References 27

Figures

1.1a Past-Practice Sluicing Configuration 2

1.1b Sluicing Configuration Planned for Tank C-106 2

2.1 Schematic of Sludge Cylinder with Sluicing Jet and Slurry Pump Locations 5

2.2 Schematic Diagram of Tank Sluicing 6

2.3 Undisturbed Volume of Waste 9

2.4a Volume Calculated When Sluicing Angle is Less Than Critical Angle 10

2.4b Volume Calculated When Sluicing Angle Is Greater Than Critical Angle 11

2.5 Volume Lower Bound 12

2.6a Depth and Sluicing Angle as Function of Volume of Disturbed Sludge 14

2.6b Cliff Radius and Sluicing Angle as Function of Volume of Disturbed Sludge 15

2.7a Cliff Radii and Sluicing Angles as a Function of the Nozzle Height for a Total Disturbed Volume of 50,000 Gallons 15

2.7b Depth and Sluicing Angles as Function of the Nozzle Height for a Total Disturbed Volume of 50,000 Gallons 16

2.8 Scaled Representation of Sluicing Sludge at Three Nozzle Heights 17

2.9 Sludge Removed When 2-ft Depth Is Reached at Pump End 18

2.10 Sludge Removed Equivalent to 2-ft Uniform Slice 18

2.11 Calculated Sludge Volumes Removed by Sluicing 19

3.1 Water Jet Trajectory 22

3.2 Force Balance on a Stream Segment 22

3.3 Effect of Drag Factor on Stream Trajectory 24

1.0 Introduction

Past-practice sluicing (PPS) has been demonstrated to be an effective way to dislodge, mobilize, and retrieve radioactive waste that has been stored in underground storage tanks and that has been transformed over many years into a thick, cohesive sludge. The commonly used arrangement for the sluicing system is two powerful sluicing nozzles positioned at two diametrically opposed locations just inside the wall of a storage tank (Figure 1.1a). A slurry pump is positioned at the center of the tank and is lifted or lowered to retrieve the mobilized slurry that has accumulated below it as a pool in the center of the tank. The height of the nozzles above the waste surface is usually fixed, but their orientation, pitch, and yaw relative to the initial horizontal direction along a tank diameter can be varied. The strengths of the jet streams can be controlled with relative precision to follow the sluicing process strategy that has been prescribed.

In Project W-320, the waste in single-shell Tank C-106[(a)] will be mobilized by sluicing, retrieved by a slurry retrieval pump, and transferred via an 1800-ft slurry pipeline to Tank AY-102. This action is planned for late FY 1998. Many of the process control parameters used in Project W-320 rely on the assumption that a 2-ft-thick layer of sludge will be removed from Tank C-106 and transported in slurry form to Tank AY-102. Sludge mobilization will be accomplished by sluicing, and a slurry pump will retrieve the mobilized sludge and deliver it to the transport pipeline. Slurries with solids concentrations of 10 to 30% by volume are expected during the retrieval and transfer operations.

In this project the configuration of the sluicing system has undergone a critical modification (Figure 1.1b). Instead of two sluicing nozzles, only one is deployed at one of the two locations used in the previous arrangement, and the retrieval pump has been moved from the center of the tank to the former location of the second sluicing nozzle. In this arrangement the single sluicing nozzle is separated from the retrieval pump by nearly 65 ft. The slurry pump elevation relative to the surface of the waste sludge is still adjustable. The height of the sluicing nozzle is fixed, but its orientation (pitch and yaw) is adjustable.

It is not realistic to expect that a uniform sludge layer will be removed from the waste cylinder within Tank C-106, considering the geometry and locations of the sluicing jet nozzle and the slurry retrieval pump. As a consequence of the sluicing configuration selected for the project, two limiting scenarios can be described. We assume that the waste sludge surface is exposed to the direct impact of the sluicing jet stream and that no supernatant layer exists above the waste surface. These assumptions make the scenarios described below considerably less conservative (more optimistic) than what one would expect.

The first scenario puts the sluicing nozzle at a nearly horizontal position, aiming at the farthest location on the waste surface in the tank, near the intake of the slurry retrieval pump. In

---

(a) Waste storage tanks at Hanford are numbered with the prefix 241- followed by the tank farm designation and tank number. In this report the prefix has been omitted, as it is in common usage.

this situation the jet stream has the least force, but the incoherent spray-like stream will still be capable of mobilizing some of the impacted waste. The resulting slurry will, however, have a volume concentration well below the expected 10%, more like 3 to 5% or less. The mobilized waste will be easily retrieved by the pump and removed from the tank.

In the second scenario the sluicing nozzle points vertically downward, hitting the sludge waste with maximum force and carving a relatively large crater into the sludge surface. With the nozzle pointing downward, the reflected streams carry a large number of particles upward

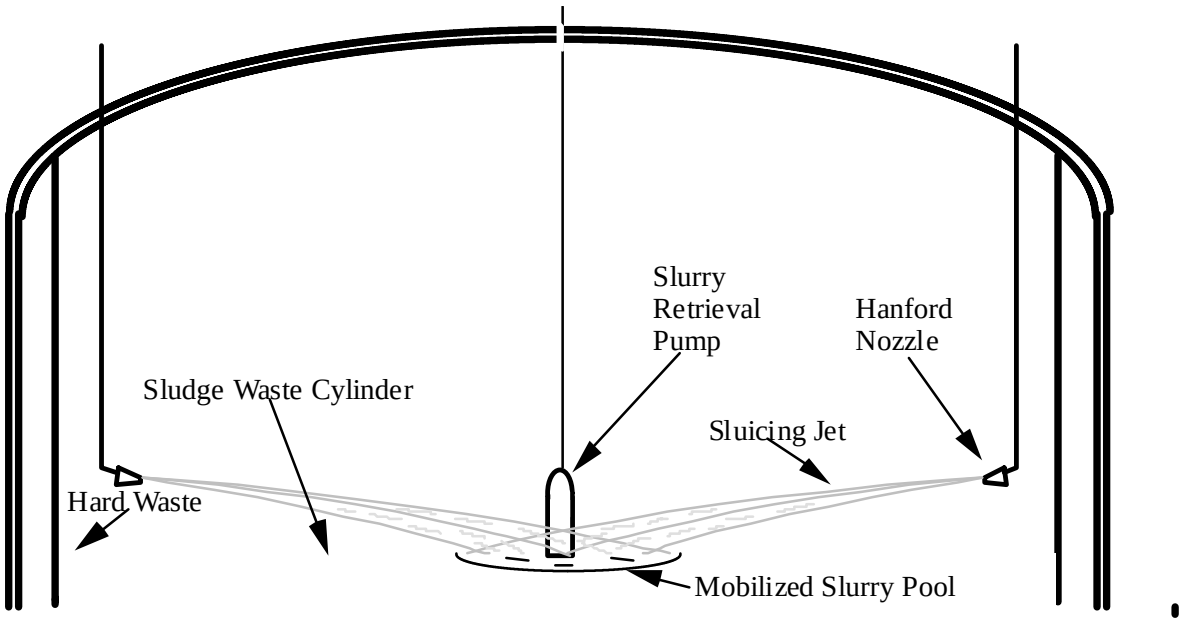

Figure 1.1a. Past-Practice Sluicing Configuration

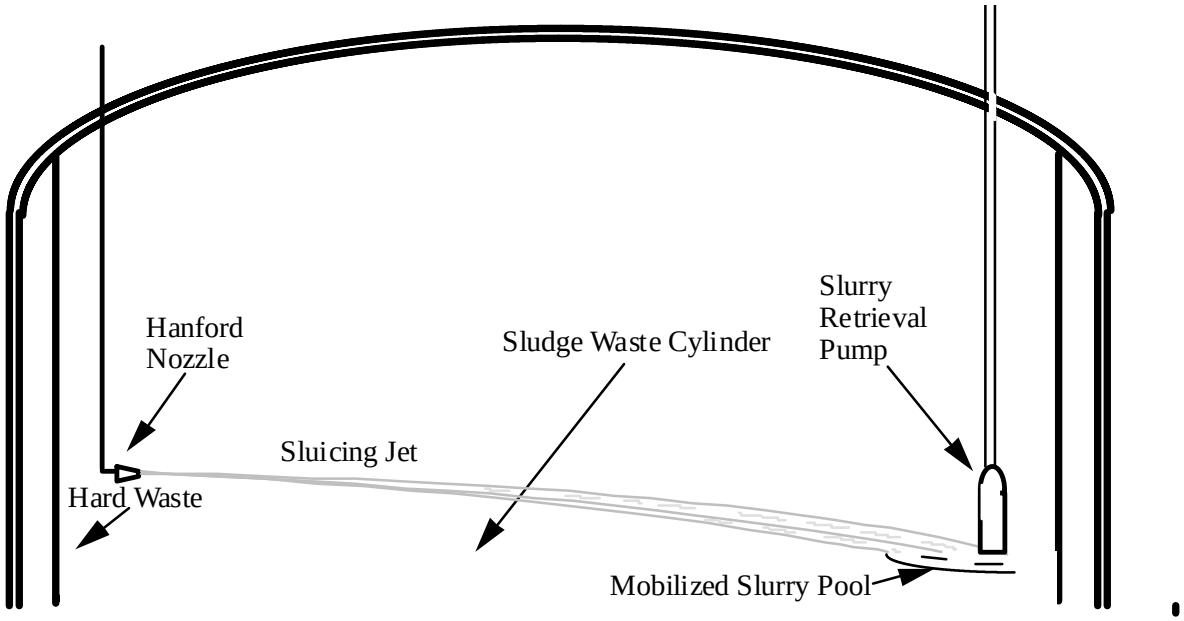

Figure 1.1b. Sluicing Configuration Planned for Tank C-106

that will soon fall back into or near the crater. If the sluicing jet stream is slightly off vertical the same situation will occur, but the reflected water streams will be off-vertical and will travel some distance as a new but weaker jet stream. The new jet stream will probably stay in the vertical plane that contains the sluicing nozzle and the slurry pump. However, since the specific gravity of the sludge particles is usually about twice that of water, the solid particles carried by the reflected jet stream will fall into positions around the original crater, forming what could be described as a levee or a sand bar. The nearly vertical downward orientation of the impacting jet implies negligible tangential force components that are incapable of moving the mobilized solids in the formed crater toward the slurry pump, and the levee that formed will act to prevent that movement. Unfortunately, there are no mechanisms in this scenario that can bring the slurried waste to the vicinity of the slurry retrieval pump, which is 65 ft away.

An inclined surface (a grade) directed from the point at which the jet stream hits the sludge surface below the sluicing nozzle (the highest point on the grade) toward the retrieval pump (the lowest point on the grade) must be gradually generated and maintained by the sluicing jet. This will allow gravity to assist in moving the mobilized slurry from the place where the jet stream strikes the waste surface to the neighborhood of the slurry pump. Agitation and currents caused by pump suction have some effect but are more likely to mobilize sludge immediately below or near the pump intake. It is not plausible for the pump suction to generate currents strong enough to move the mobilized sludge from the opposite side of the tank without the grade (gravity), especially with levee-type mounds in between. The sluicing jet momentum should also be gradually reduced as the nozzle orientation gets closer to the vertically downward direction to avoid the formation of such levees. Obviously, visual observation of the sluicing process would be extremely valuable.

The long-range objective for this effort (covering FYs 1997, 1998, and possibly 1999) is to develop a phenomenological mechanistic model that integrates submodels defining 1) the geometrical zone of influence of sluicing jets with trajectories that are true, rather than strictly linear, and a certain given sluicing configuration and waste surface geometry; 2) a more accurate trajectory of the sluicing jet and the average force encountered at the target area on the surface of the sludge waste; and 3) the erosive action of the sluicing jet at the surface of the sludge waste due to the magnitude and direction of the impact of that jet on the waste surface. In this report, initial model developments associated with (1) and (2) are introduced. All approaches and descriptions pertain to what is known, at the time of this writing, to be the process plans for Project W-320.

2.0 Sluicing Model Development

This section presents a short discussion on the mechanics of the sluicing operation as dictated by the planned sluicing configuration in Project W-320. A single sluicing nozzle will be located approximately 5 ft from the internal wall surface of Tank C-106, which is 75 ft in diameter, and a slurry pump will be located at a diametrically opposed position, 5 ft from the opposite inside tank wall (the nozzle location implies the nozzle hinge location). Therefore, the sluicing jet is always at a horizontal distance of 65 ft from the slurry pump. While the slurry pump can be raised or lowered vertically, the sluicing nozzle elevation is fixed relative to the waste surface. We assume that the nozzle is mounted on a mechanical arm that is permanently hinged about 9 ft above the surface of the sludge. The nozzle itself is capable of rotating about that hinge in a vertical plane (pitch angle) and can be set at a prescribed negative angle from the horizontal. We anticipate that the nozzle axis will always be positioned at angles α 0 down from the horizontal. The vertical column that supports the nozzle/hinged arm assembly can also rotate about its own axis (yaw angle) to allow the nozzle to sweep over a conical surface when $\alpha > 0$ to cover all regions within the cylindrical waste volume.

Figure 2.1 depicts the nozzle hinge, the sluicing jet, the slurry pump intake, and the waste cylinder of initial depth h. The sluicing nozzle hinge is located at height H above the tank bottom and is aligned in this figure with the tank's edge. Two angles are defined in the figure; the first is α_0, which represents the minimum angle with the horizontal (positive angles are in the direction below the horizontal), below which no sludge waste can be disturbed. The second angle, α_c, is a critical angle representing the nozzle orientation that causes the straight jet stream to first meet the tank floor.

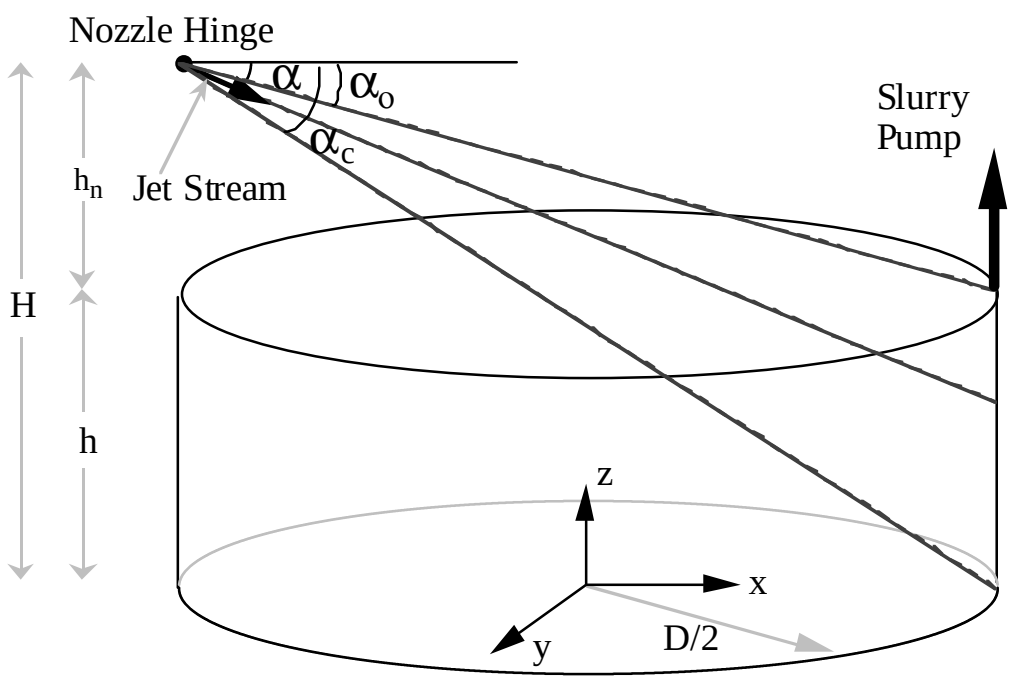

Figure 2.1. Schematic of Sludge Cylinder with Sluicing Jet and Slurry Pump Locations (no overlayer of supernatant liquid shown)

2.1 Geometrical Sluicing Model

The nozzle, whose location is represented by the location of the hinge about which its pitch and yaw angles can vary, is located at one edge of the hypothetical waste cylinder that is concentrically positioned within the actual storage tank. The location of the nozzle hinge is at a height (H-h) above the waste sludge surface. The nozzle hinge can also be moved along a diameter to a distance of $\pm$ a in the x-direction and along the line that contains a = 0. The nozzle pitch angle, α, can vary between 0 and +90°, and its yaw angle can vary about the nozzle-to-pump connecting line in such a way as to sweep the jet stream back and forth across the tank at a constant downward angle from the horizontal plane (Figure 2.2). The surface traced out by the jet sweep is that of a cone with its apex at the nozzle hinge. This cone is bounded, in part, by the boundaries of the waste cylinder and by the bottom of the tank. The material that the jet disturbs is the volume of waste that is above the cone's surface. It is this volume that we will determine by a method that is part analytical and part numerical.

In Figure 2.2 the disturbed waste volume shown is bounded by the waste cylinder to a depth δ and by the conical surface generated by the nozzle sweeping lateral movement at angle α. This volume can equal the volume of a cylindrical slice of sludge with a uniform thickness η. In the following section a theoretical development relates the two volumes and gives a comprehensive description of the generated surfaces for various sluicing jet heights and locations relative to the edge of the waste sludge cylinder.

The model assumes that the sluicing jet is a momentum line source of varying strength. The initial jet velocity will be sufficiently high as to allow neglecting the effects of gravity and cause the jet trajectory to be straight. We begin with the analytical portion of the volume determination. This is carried out in reference to a coordinate system whose origin is at the bottom center of the tank, as shown in Figure 2.2.

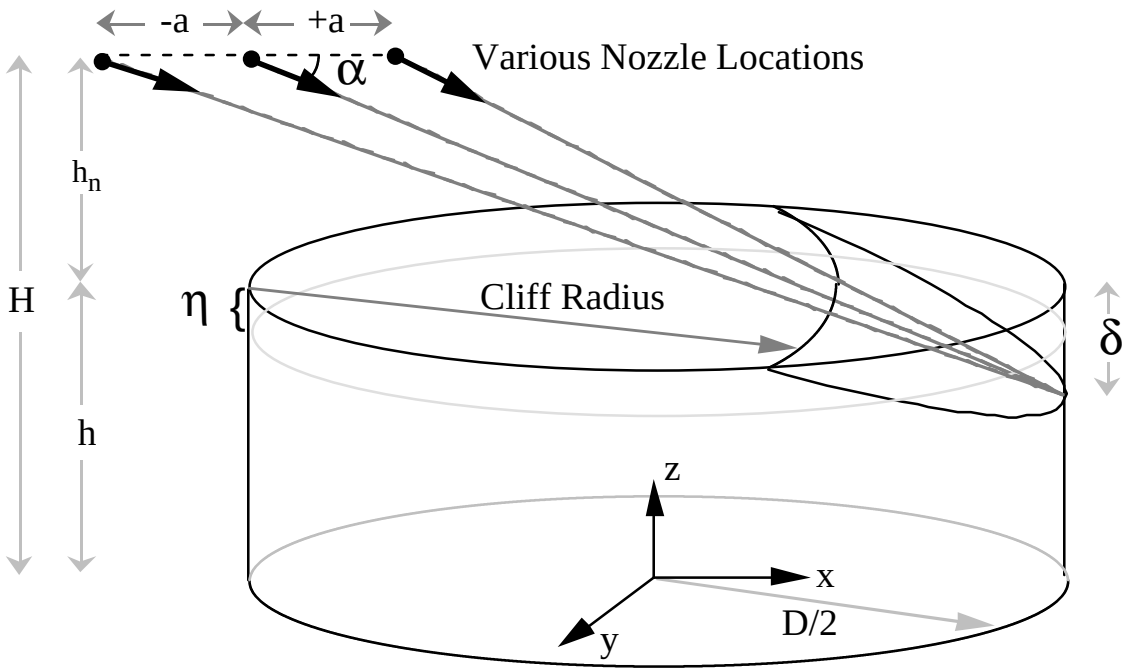

Figure 2.2. Schematic Diagram of Tank Sluicing

From standard analytical geometry, the equation of the cylindrical tank is

$$x^2 + y^2 = D^2 / 4 \qquad \text{for } z \quad H \tag{2.1}$$

and the equation of the cone traced out by the jet is

$$(x + D/2 - a)^2 + y^2 = (\cot^2 \alpha)(z - H)^2 \tag{2.2}$$

where

- x = the horizontal distance of a point from the center of the tank along the diameter on which the nozzle hinge plan projection lies. The arcs swept by the jet have the vertical plane containing the x-axis as a plane of symmetry.
- y = the horizontal distance of a point from the center of the tank along a horizontal axis perpendicular to the x axis.
- D = the diameter of the tank.
- a = the distance (along the x-axis) from the edge of the waste cylinder to the nozzle hinge. The current sluicing system sets a = 0, but the variable is included in the derivation for generality. The nozzle hinge is always located at coordinates [-(D/2)+a, 0, H].
- α = the sluicing nozzle pitch angle (sluicing angle), which will be considered positive measured down from the horizontal.

The variable a is included to aid in future data acquisition and analysis. Planned future experiments include a model tank that is only 30 ft in diameter rather than 65 ft; the smaller size is dictated by space and cost limitations. Since these planned experiments will use the actual-full size Hanford nozzle operating at full pressure, the force of the impact will be identical to that in the real situation, but the tank will be smaller. With the present model the nozzle hinge in the experiments can be positioned at a distance a = - 35 ft and at the same height anticipated in the actual sluicing operation. The sluicing jet will impact the sludge simulant 65 ft from its location, just as in the real situation. The data will be a good representation of the actual sluicing operation in the full-size tank, and the model will be capable of fully representing the experimental configuration.

When the angle α is less than a certain value, α_0, the jet hits the boundary of the waste cylinder at the sludge surface and will have no mobilization capabilities. The minimum effective angle, α_0, is found to be

$$\alpha_0 = \tan^{-1}\left(\frac{H - h}{D - a}\right) \tag{2.3}$$

where

- h = the waste depth above the tank floor (the floor is at z = 0).

All the cases of interest have sluicing angles that are greater than the minimum effective angle, α_0, for obvious reasons.

Another angle of importance is the minimum angle at which the jet meets the bottom of the waste cylinder rather than its boundaries. This critical angle, α_c, is given by

$$\alpha_c = \tan^{-1}\left(\frac{H}{D-a}\right) \tag{2.4}$$

Finally, we need to know the location of the points at which the jet meets both the tank wall and the waste sludge surface during a typical cross sweep—in other words, the two bounding corners of the "cliff." The x and y coordinates of both corners, x_p and y_p, are

$$x_p = \frac{(\cot^2\alpha)(h-H)^2 - D^2/4 - ((D/2)-a)^2}{D-2a} \tag{2.5}$$

$$y_p = +\sqrt{(D^2/4)-x_p^2}, \quad -\sqrt{(D^2/4)-x_p^2} \tag{2.6}$$

The variable x_p represents the minimum value of x at which any waste is disturbed for the shown configuration and given a pitch angle α.

The above-defined variables will be important in setting the limits of the various volume integrals defined below. The object of those integrals is to calculate three distinct volumes which, when combined, will give the volume of the disturbed sludge:

1) V_b, the undisturbed cylindrical volume of waste in the back of a vertical plane at distance $x = x_p$, where x_p is the x-coordinate of the bounding corners of the cliff. This volume is found by integrating the portion of the cylinder of waste for which x x_p and is depicted in Figure 2.2.

2) V_x, the total volume of the conical prism that is in front of the bounding corners of the cliff. This volume includes both the undisturbed waste and the space above the waste. It is found by integrating from the bottom of the waste cylinder up to the cone surface for x x_p (shown in Figures 2.3a and 2.3b).

3) V_a, the total volume of the space that is above the waste but under the cone and in front of the corners of the cliff. This volume includes only the space above the waste. Subtracting V_a from V_x gives the volume of undisturbed waste in front of the back corners of the cliff. The volume V_a is found by integrating from the waste surface at z = h up to the cone surface, for x x_p.

Once these three volumes are found, the volume of disturbed waste, V_s, is given by

$$V_s = (\pi D^2 h/4) - V_b - (V_x - V_a) \tag{2.7}$$

Here the total volume of undisturbed waste, which is made up of the sections behind and in front of the bounding corners of the cliff, is subtracted from the original total waste volume to give the volume of the disturbed waste. Each of the three integrals is described in the following derivations.

ò1. *Undisturbed Volume of Waste Behind the Bounding Corners of the Cliff*

The volume V_b (Figure 2.3), which is located entirely behind a plane perpendicular to the x axis and at a distance x_p from the origin, is defined by

$$V_b = \int_{-D/2}^{x_p} \int_{-\sqrt{(D^2/4)-x^2}}^{+\sqrt{(D^2/4)-x^2}} \int_0^h dz\, dy\, dx \tag{2.8}$$

This triple definite integral can be solved analytically to yield

$$V_b = h\left[x_p y_p + (D^2/4)\left(\frac{\pi}{2} + \sin^{-1}(2x_p/D)\right)\right] \tag{2.9}$$

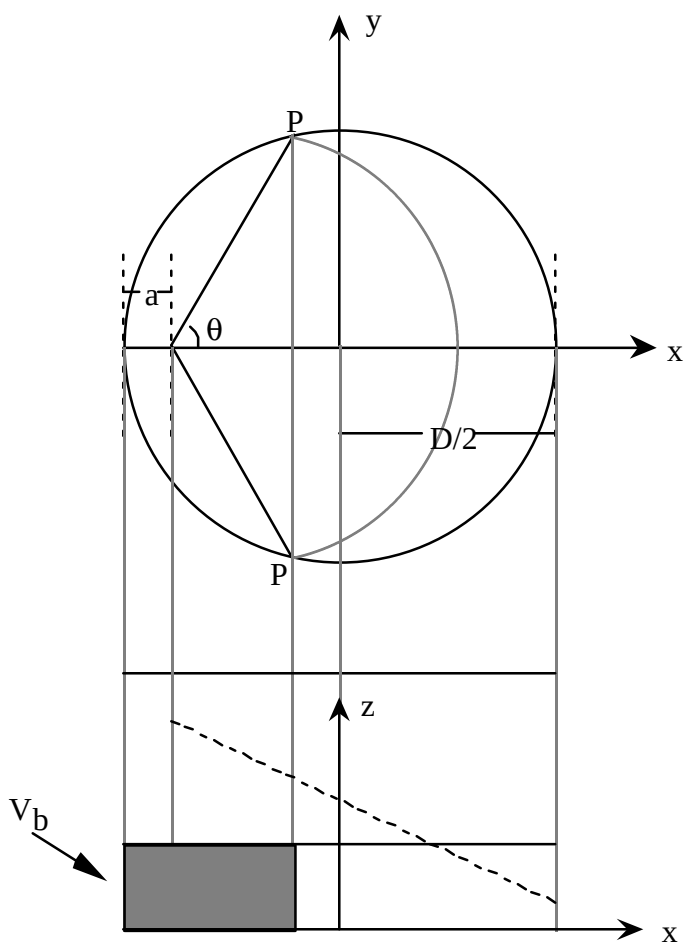

Figure 2.3. Undisturbed Volume of Waste

2. *Volume of the Air and Waste Contained in the Conical Prism in Front of the Bounding Corners of the Cliff*

The volume V_x must be calculated for two different cases depending on whether the nozzle jet sweep produces a conical prism whose longest side terminates at the tank floor or the tank wall—that is, whether the sluicing angle is greater or less than the critical angle $_c$.

<u>Case 1:</u> If the sluicing angle is less than the critical angle (Figure 2.4a), the surface of the cone is bounded where it meets the tank by a single continuous arc formed at the wall, and all of the cone's surface within the tank-wall cylinder is at a height above the tank bottom. In other words, the z coordinate of the cone is always greater than zero, and there are no "negative integration volumes" to be avoided. In this case,

$$V_x = \int_{x_p}^{+D/2} \int_{-\sqrt{(D^2/4)-x^2}}^{+\sqrt{(D^2/4)-x^2}} \int_0^{H-(\tan\alpha)\sqrt{(x+(D/2)-a)^2+y^2}} dz\, dy\, dx \qquad \text{for} \quad {}_c \qquad (2.10)$$

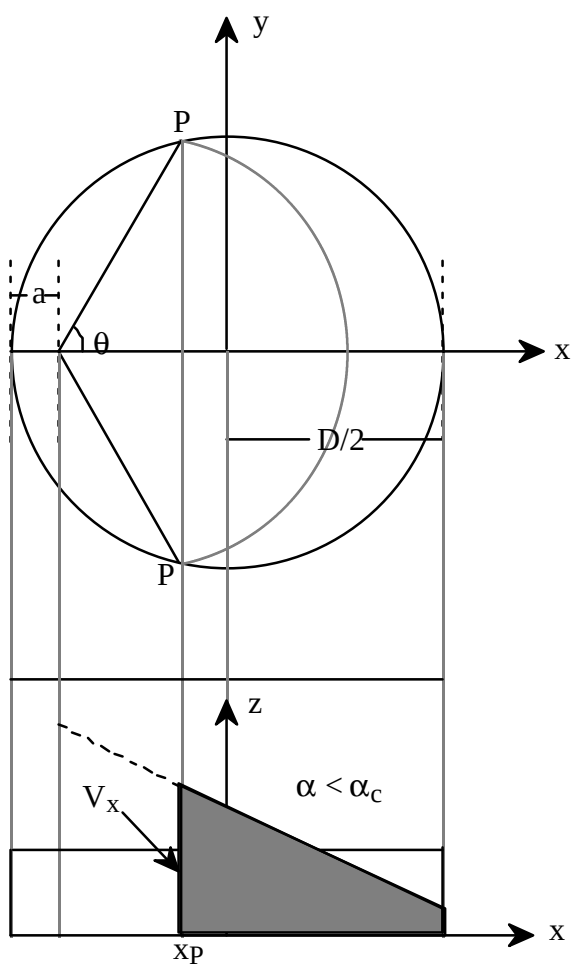

Figure 2.4a. Volume Calculated When Sluicing Angle is Less Than Critical Angle

Case 2: If the sluicing angle is greater than the critical angle, $> {}_c$ (Figure 2.4b), the cone's surface is bounded partly (on the sides) by where it meets the tank wall and partly (at the front base) by where it meets the tank floor. Unless these bounding curves are used as limits of integration, there will be regions of integration where the cone surface passes below the tank floor, and part of the integrated volume will be negative. This must be avoided. The following sum of integrals is derived:

$$V_x = \int_{x_p}^{x_m} \int_{-\sqrt{(D^2/4)-x^2}}^{+\sqrt{(D^2/4)-x^2}} \int_0^{H-(\tan\alpha)\sqrt{(x+(D/2)-a)^2+y^2}} dz\ dy\ dx + \int_{x_m}^{x_a} \int_{-\sqrt{H^2(\cot^2\alpha)-(x+(D/2)-a)^2}}^{+\sqrt{H^2(\cot^2\alpha)-(x+(D/2)-a)^2}} \int_0^{H-(\tan\alpha)\sqrt{(x+(D/2)-a)^2+y^2}} dz\ dy\ dx \quad (2.11)$$

In Equation 2.11, the coordinate x_m is the x value at which the cone meets both the wall and the floor. This coordinate is defined as

$$x_m = \frac{(\cot^2\alpha)H^2 - D^2/4 - ((D/2)-a)^2}{D-2a} \qquad \text{for} \quad > {}_c \qquad (2.12)$$

Equation 2.12 uses the coordinate x_a as the maximum integration limit. This is the x value at y = 0, the maximum x value on the curve where the cone meets the floor, defined as

$$x_a = (H \cot\alpha) - D/2 + a \qquad \text{for} \quad > {}_c \qquad (2.13)$$

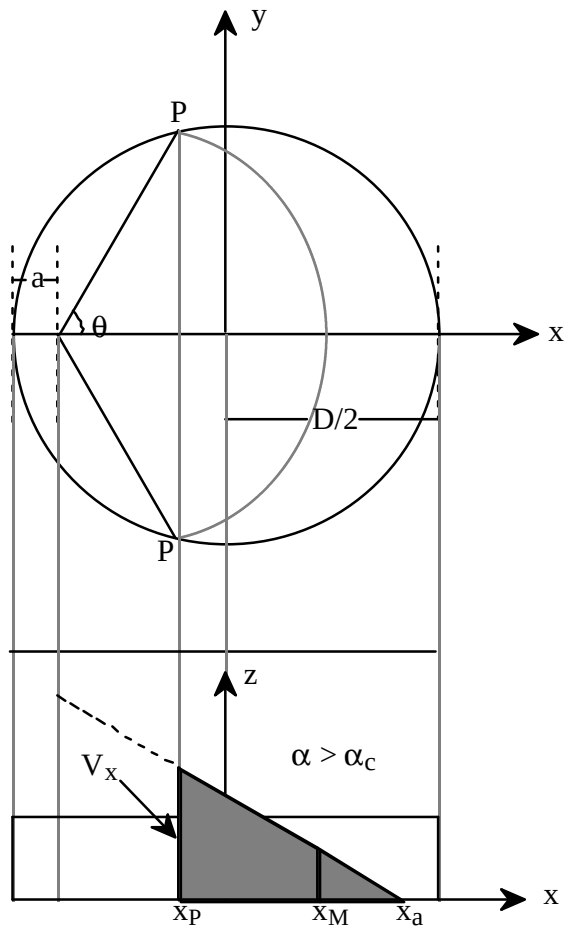

Figure 2.4b. Volume Calculated When Sluicing Angle Is Greater Than Critical Angle

The triple definite integrals in Equations 2.10 and 2.11 can only be partly integrated through analytical means; the outermost integration must be handled numerically.

3. *Volume of the Air Contained in the Conical Prism in Front of the Bounding Corners of the Cliff*

The volume, V_a, has, as its lower bound in z, the waste surface at z = h (Figure 2.5). Its bounding curve occurs where the cone meets the waste surface, at $x = x_p$; the curve is defined by

$$(x + (D/2) - a)^2 + y^2 = (h - H)^2 \cot^2 \alpha \tag{2.14}$$

Therefore, the integral defining this volume is given by

$$V_a = \int_{x_p}^{x_s} \int_{-\sqrt{(h-H)^2(\cot^2\alpha) - (x+(D/2)-a)^2}}^{+\sqrt{(h-H)^2(\cot^2\alpha) - (x+(D/2)-a)^2}} \int_{h}^{H-(\tan\alpha)\sqrt{(x+(D/2)-a)^2+y^2}} dz\, dy\, dx \tag{2.15}$$

In Equation 2.15, the coordinate x_s is the x value at y = 0, the maximum x value on the curve where the cone meets the waste surface. This coordinate is defined as

$$x_s = ((H - h)\cot\alpha) - (D/2) + a \tag{2.16}$$

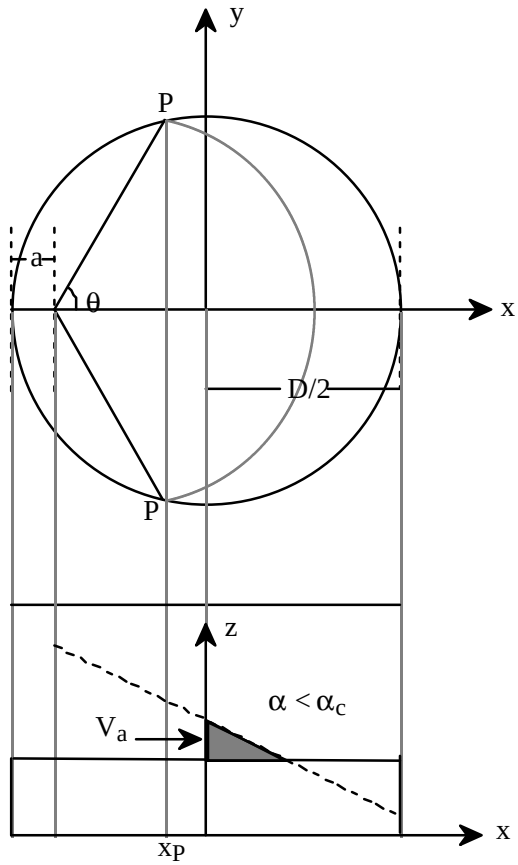

Figure 2.5. Volume Lower Bound

The triple definite integral in Equation 2.15 can only be partly integrated through analytical means; the outermost integration must be handled numerically.

Auxiliary Variables

Certain variables that can be obtained from the above derivation are of importance in measuring the extent of sluicing and in model verification. One such variable is R, the radius of the "cliff edge" as measured (in plan view) from the nozzle hinge. The equation for the cliff edge was already given as Equation 2.14. Its radius can be determined by setting y = 0 to find the maximum x value and by adding (D/2 - a) to the result. Then R is

$$R = (H - h)\cot\alpha \tag{2.17}$$

Another useful sluicing metric is δ, the maximum distance the jet has penetrated below the original waste level. This point is reached at the far side of the tank from the nozzle, at x = D/2. The variable δ can be calculated from

$$\delta = (D - a)(\tan\alpha) - (H - h) \qquad \text{for } \alpha \quad \alpha_c \tag{2.18}$$

$$\delta = h \qquad \text{for } \alpha > \alpha_c \tag{2.19}$$

The volume-equivalent sludge depth, η, is another useful measure of the amount of material sluiced. This metric η is defined as the thickness of the sludge layer (over the whole tank area) whose volume is equal to the sluiced volume, V_s (Equation 2.7). It follows that

$$\eta = 4V_s / \pi D^2 \tag{2.20}$$

2.2 Numerical Integration

As indicated earlier, the triple integrals in Equations 2.10, 2.11, and 2.15 can be integrated analytically with respect to z and y. Integrations with respect to z are straightforward, and those with respect to y were obtained by using the symbolic manipulator Mathematica® (the resulting expressions are lengthy and cumbersome and are not included here). The integrations with respect to x were performed numerically by using an adaptive algorithm implemented in Mathematica that recursively subdivides the integration region as needed.

The numerical calculations focused on the determination of the volume of sludge sluiced from a layer of waste by means of a jet located at height H above the tank floor (Figure 2.1). The numerically calculated volume of removed sludge is graphically represented as a function of the sluicing angle α, the cliff radius R, and the maximum depth δ that the jet has penetrated below the original waste level. For brevity we refer to this metric as the depth δ, as shown in Figure 2.1.

2.3 Results and Discussion

Tank C-106 is believed to contain hard deposits that are attached to its inner wall. The sludge is contained mainly in a pool within that hard crust. For this situation, we placed both the sluicing nozzle hinge (presumably located along the supporting column) and the slurry retrieval pump at distances 5 ft radially inward from the tank's inner wall. In reality, the sluicing nozzle will have a cylindrical zone of influence that is 65 ft in diameter. The depth of the sludge layer to be removed is 6 ft, and its surface elevation is about 9 ft below that of the sluicing nozzle hinge.

The hypothetical waste cylinder is, therefore, 65 ft in diameter and 6 ft deep. The sluicing nozzle hinge will then be located at the cylinder's edge, 9 ft above the surface of the waste sludge, and the slurry retrieval pump will be at the diametrically opposed edge. The height of the slurry retrieval
pump can be varied, while that of the nozzle hinge cannot. The effect of different nozzle hinge elevations has been used as a metric to show the influence of its variation on the outcome of the sluicing volume. This is the configuration depicted in Figure 2.1.

For all calculations the waste cylinder was considered to be 65 ft in diameter with a sludge layer 6 ft deep. The height of the sluicing jet is the only parameter that has been varied. Figures 2.6a and 2.6b show the depth δ, the cliff radius R, and the sluicing angle α as functions of the volume of disturbed sludge, V_s, for nozzle heights, H, of 10, 15 and 20 ft. Notice that δ is an increasing function of V_s between 0 and a particular volume $V_H = V_H$ (H), at which $\delta = h$. Beyond V_H, the depth δ remains constant at 6 ft.

If the volume of disturbed sludge is a predetermined amount V_η (this volume can be viewed as the equivalent volume of a cylinder of sludge waste of depth η and diameter D, as shown in Figure 2.1), the sluicing jet would have to sweep through the sludge between the sluicing angles α_0 and α_f, α_f being the final sluicing angle. Therefore, if $V_s = V_\eta = V_H$, then $\alpha_f = \alpha_c$, and $\delta = h$. Figures 2.7a and 2.7b show the sluicing angles (minimum α_0, critical α_c, and final α_f), the central cliff radii, and the depth δ as a function of the nozzle height for a total disturbed volume of sludge V_η = 50,000 gallons. Notice that the case in which the critical and final sluicing angles coincide (8.88°) occurs when the jet is 10.15 ft above the tank floor and the cliff radius is 26.56 ft.

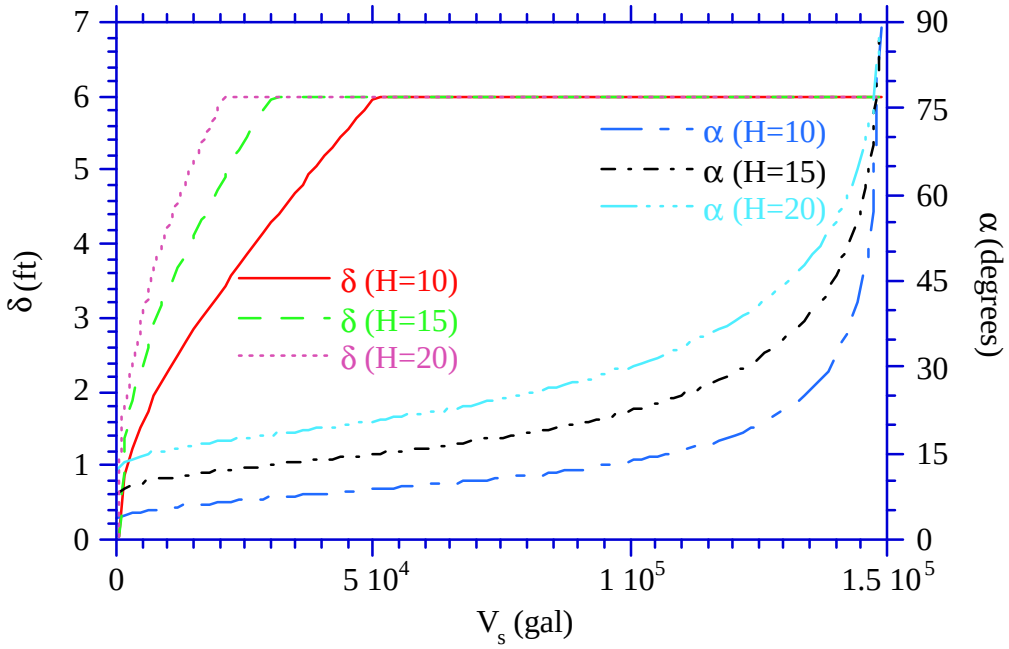

Figure 2.6a. Depth δ and Sluicing Angle as Function of the Volume of Disturbed Sludge

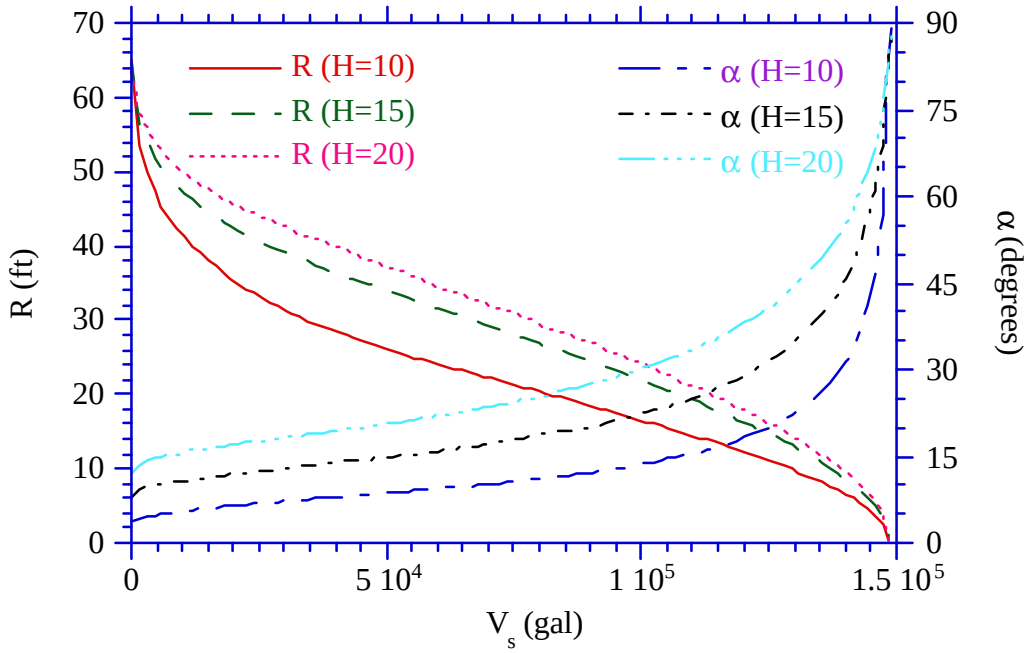

Figure 2.6b. Cliff Radius and Sluicing Angle as a Function of the Volume of Disturbed Sludge

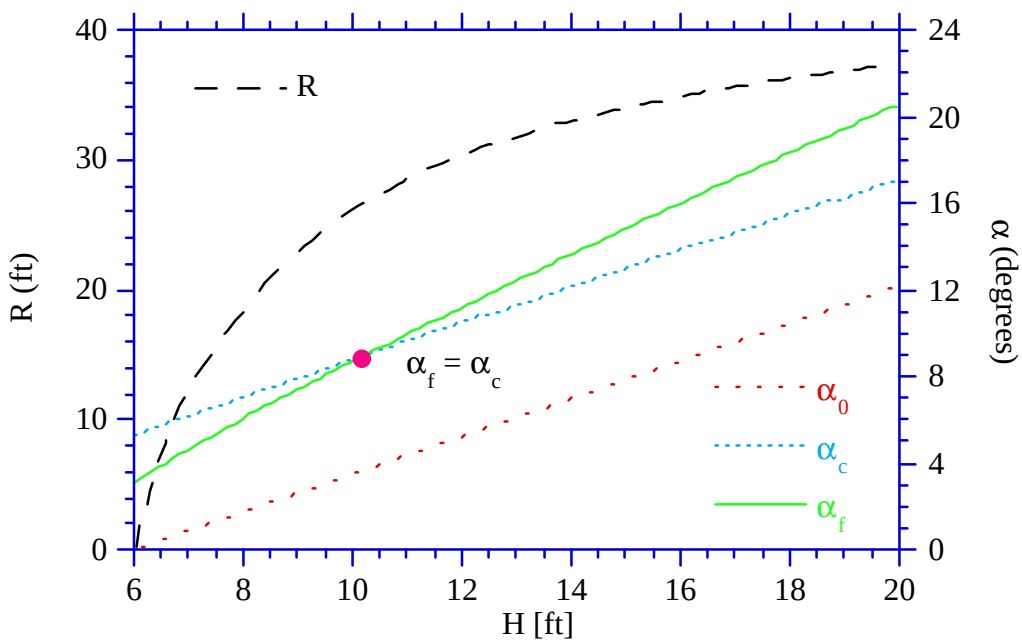

Figure 2.7a. Cliff Radii and Sluicing Angles as a Function of the Nozzle Height for a Total Disturbed Volume of 50,000 Gallons

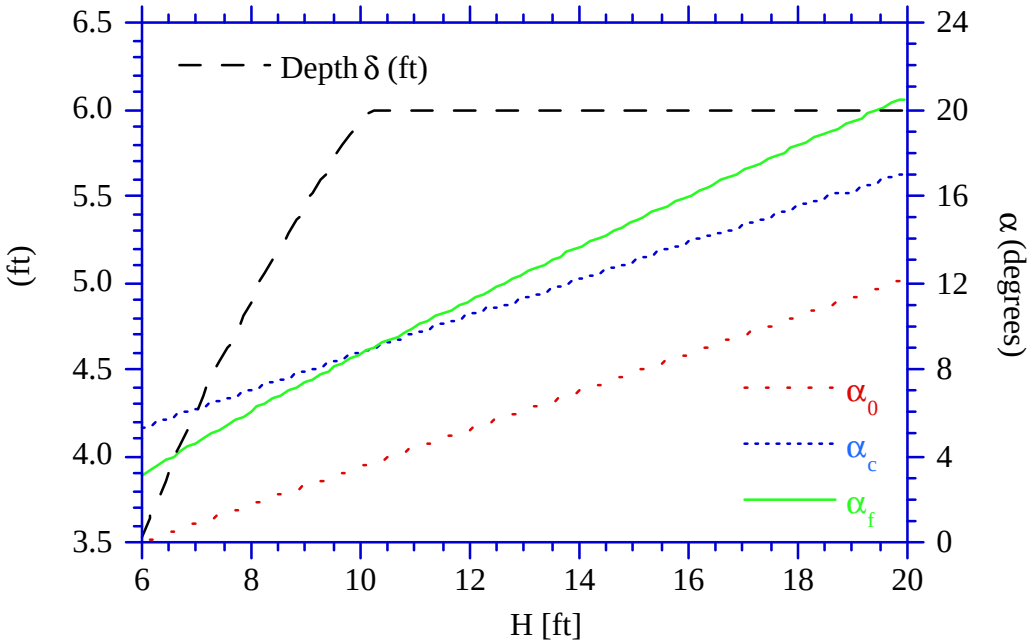

Figure 2.7b. Depth δ and Sluicing Angles as a Function of the Nozzle Height for a Total Disturbed Volume of 50,000 Gallons

Figure 2.8 shows a schematic representation for the sluicing of 50,000 gallons of sludge (shaded regions) at three different sluicing nozzle heights.

2.4 The Case of the 2-ft Bologna Slice

The first stage of the sluicing campaign for Tank C-106 stipulates the mobilization and retrieval of the top 2 ft of the 6-ft-deep sludge layer (referred to as the Bologna Slice). It is not realistic to expect that a uniform sludge layer can be removed from the waste cylinder considering the geometry and locations of the sluicing jet and the retrieval pump. An inclined surface (a grade) directed toward the retrieval pump must be generated and maintained by the sluicing jet to let gravity move the mobilized slurry from near the sluicing nozzle to the vicinity of the slurry pump. Such a surface can be achieved with relative ease if the sluicing nozzle can be gradually lowered toward the sludge surface as shown in the previous section. Ideally, a constant grade that extends from the location straight below the nozzle hinge to the location of the slurry pump suction port can be achieved if the sluicing nozzle hinge can be lowered closer to the sludge surface. Unfortunately, this is not an option in the present sluicing configuration. Agitation and currents induced by the pump suction will have some mobilizing effect but are more likely to influence sludge in the vicinity of the pump intake. It is not plausible for the pump suction to generate currents strong enough to induce the mobilized sludge near the nozzle side of the tank to move toward the slurry retrieval pump without the proposed gravity grade.

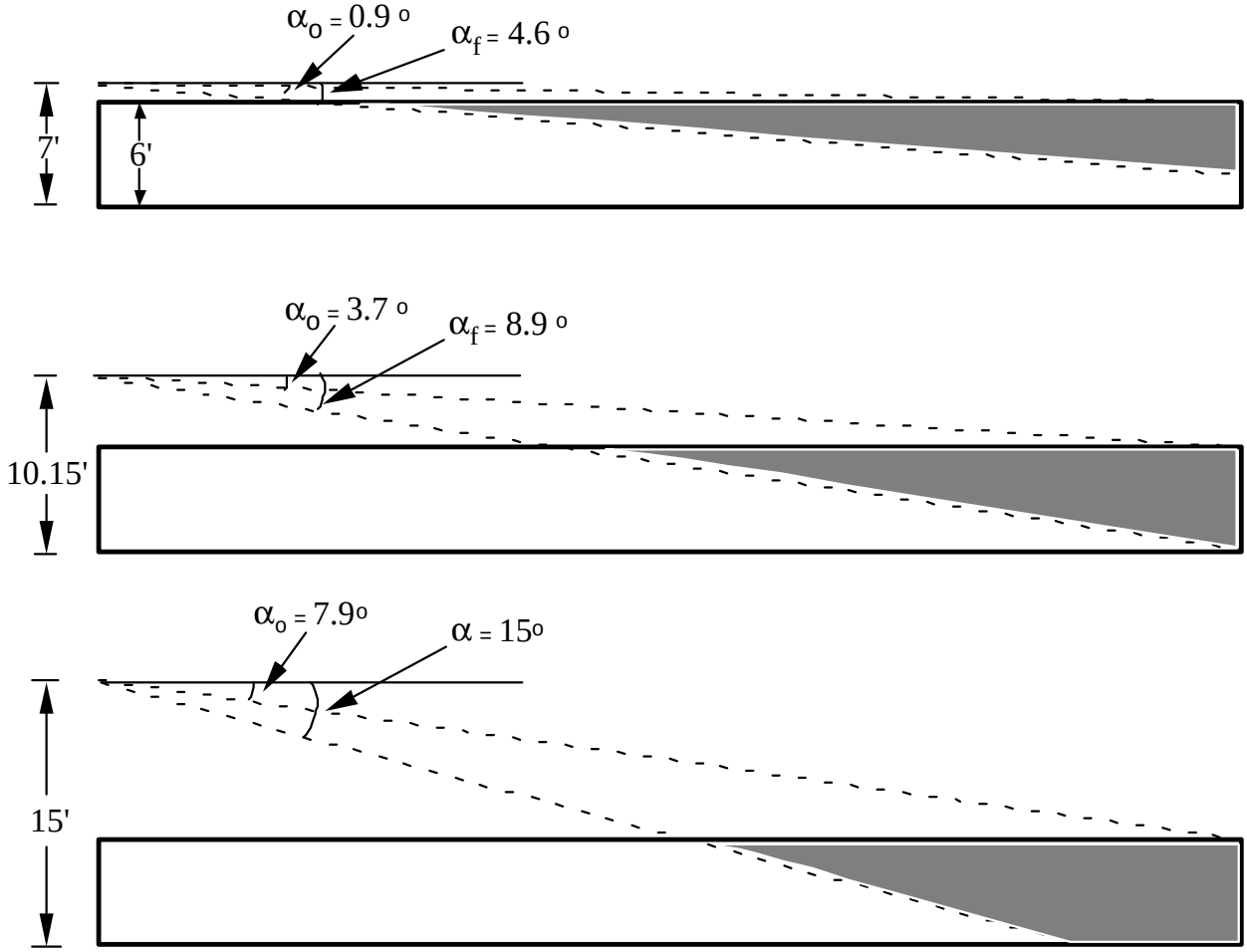

Figure 2.8. Scaled Representation for Sluicing 50,000 Gallons of Sludge at Three Sluicing Nozzle Heights (top to bottom the depth δ is 4.26, 6.0, and 6.0 ft, respectively)

A rough description of what can be expected from the present sluicing configuration is illustrated in Figures 2.9 and 2.10. Figure 2.9 shows the situation in which the sluicing jet is confined to mobilizing waste sludge within the upper 2-ft layer. In this case $\alpha = 9.6°$ and $\delta = 2$ ft with a removed sludge volume of approximately 3,455 gallons. To remove a sludge volume of 50,000 gallons, which represents a cylindrical waste slice of uniform thickness, $\eta = 2$ ft (the 2 ft thick "bologna slice" baseline), the sluicing nozzle must remove the sludge all the way to the bottom of the 6-ft-high waste cylinder and advance back a considerable distance, as shown in Figure 2.10. In this case, $\alpha = 15°$ and $\delta = h = 6$ ft with a removed sludge volume of 50,000 gallons. Figure 2.11 shows the solution to the developed model for h = 6 ft and H = 15 ft, which represents the actual sluicing nozzle location relative to the waste sludge surface in Tank C-106.

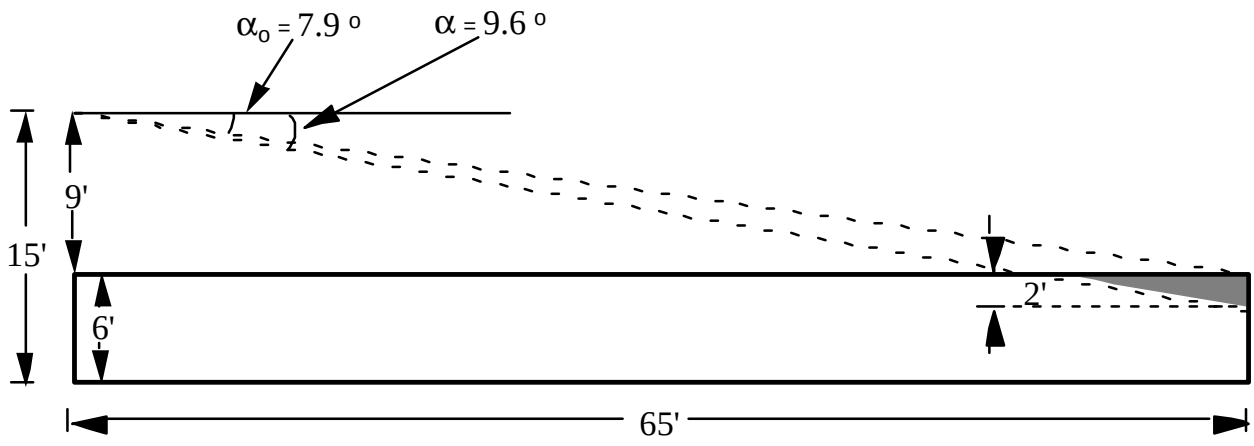

Figure 2.9. Sludge Removed When a Depth of 2-ft is Reached at Retrieval Pump End

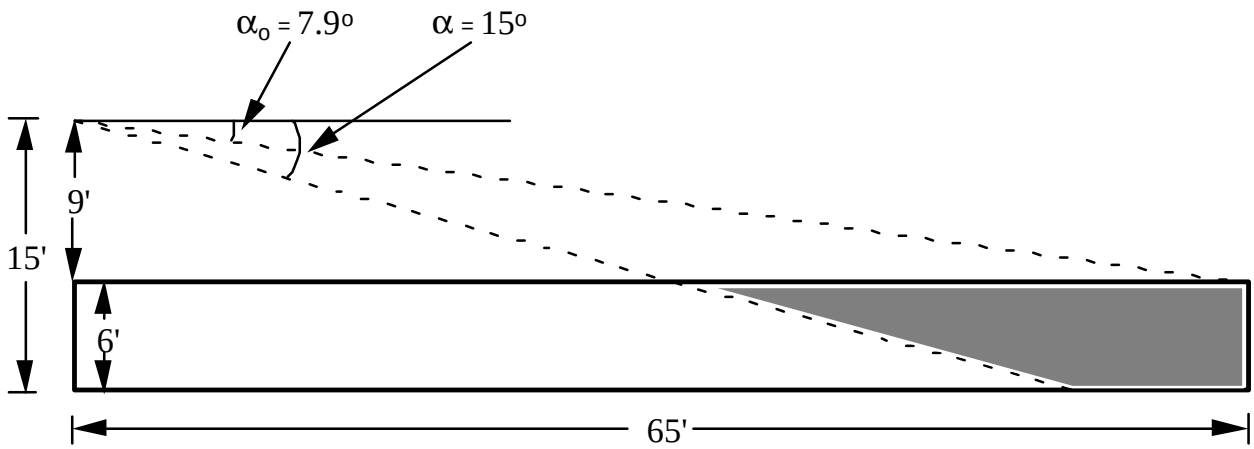

Figure 2.10. Sludge Removed Equivalent to a 2-ft Thick Uniform Slice, 50,000 gallons

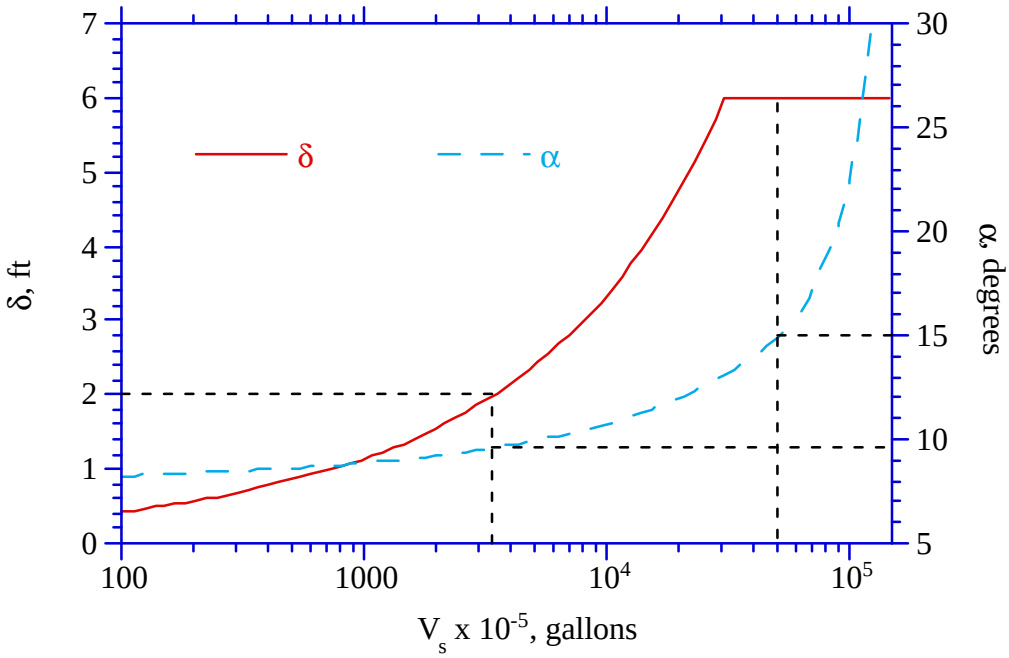

Figure 2.11. Calculated Sludge Volumes, V_s, Removed by Sluicing

2.6 General Remarks

Creating the desired grade means that sludge will be disturbed to a greater depth than originally planned in this transfer stage. That is, to remove the top two feet it may be necessary to disturb four or more feet near the pump. A higher-than-expected heat load thus may be transferred in the first 2-ft stage because the concentration of heat-generating isotopes increases with sludge depth. Many of the heat transfer calculations may be influenced by the practical aspects of solids removal via the installed sluicing/retrieval geometry. Also, it will not be practical to determine the original gas content of C-106 from the volume of gas released during sluicing until most of the waste has been removed.

Sludge mobilization is made even more difficult by the need to retain a 2-ft layer of supernatant liquid above the sludge surface to maintain hydrostatic pressure. The supernatant liquid will reduce the effectiveness of the sluicing jet and the ability to maneuver and “massage” the sludge surface, especially at large distances from the nozzle exit. This may cause the retrieved slurry to have considerably lower solids concentration. A potential improvement to the sluicing process would be to allow the sluicing nozzle support riser to be lowered in a controlled manner from its planned fixed position so the sludge can be “massaged” by the water jet to achieve the shallowest possible grade between the nozzle and the pump.

3.0 Sluicing Jet Models

In the Section 2 a geometrical model was developed to predict the amount of material removed from a circular tank as a result of the scouring effect of a sluicing jet. The jet emanates from a nozzle and is assumed to reach the surface of the material to be scoured along a straight trajectory. Given a certain sluicing pitch angle, the yaw angle range through which the sluicing jet sweeps generates a conical surface whose intersection with the cylindrically shaped material block defines the amount of removable material. In reality, however, the sluicing jet sweep generates a second-order surface (parabolic if drag forces are negligible) rather than a conical one.

In principle, the intersection of such a surface with the cylindrically shaped material block is still possible to model. The resulting equations will be too complex for analytical treatment, and the whole set of surface and volume integrals will need to be evaluated numerically.

In this section the dynamics of an idealized sluicing jet are represented by a Lagrangian description. In addition, the pressure field generated by the impact of the sluicing jet on the surface of the material to be scoured is modeled, and the integration of this field to obtain the magnitude and direction of a representative impact force is derived. The solution of that model produces an idealized jet trajectory that can be used in the future to calculate more accurately the amounts of material removed by sluicing jet scouring. The many approximations and assumptions that must be made to achieve these results are discussed in the following sections.

3.1 Dynamics of the Sluicing Jet

In this section, upper bounds are derived for the magnitude of the force produced by a water jet emanating from a circular nozzle, penetrating through air along a trajectory that is influenced by both drag and gravity forces, then impinging on a flat horizontal surface. In addition, estimates of the pressure field, including the stagnation pressure on the flat surface, are obtained. Determining the pressure field and the corresponding normal force leads to the determination of the direction of the overall impact force.

A hinged nozzle that is located 9 ft above ground level produces a circular water jet. A Cartesian coordinate system is defined whose origin is located at ground level directly below the nozzle hinge. The nozzle is aimed at a flat, horizontally oriented target plate that could be located up to 65 ft away from the origin of the coordinate system. The average velocity range of the ensuing water jet is 60 to 100 ft/sec, and the nozzle exit diameter is 1 in. The nozzle pitch angle can be varied using the supporting hinge in a plane formed by the nozzle hinge, the origin of the coordinate system, and the center of the target plate. A maximum angular displacement of 90° is allowed where the zero angle occurs when the nozzle is parallel to the ground, and 90° occurs when the nozzle is pointing down toward the origin of the coordinate system. Figure 3.1 shows the coordinate system and a schematic of the water jet trajectory.

Because drag is acting upon the water flowing out of the nozzle, the trajectory of the stream will not be parabolic (Rouse et al. 1952). In the present model, the effect of drag, both form and frictional (viscous), on the stream will be taken into account in formulating the equations of motion. Using a coordinate system whose origin is directly below the sluicing nozzle hinge and is on the surface to be sluiced (this coordinate system is different than the one shown in Figure 2.2),

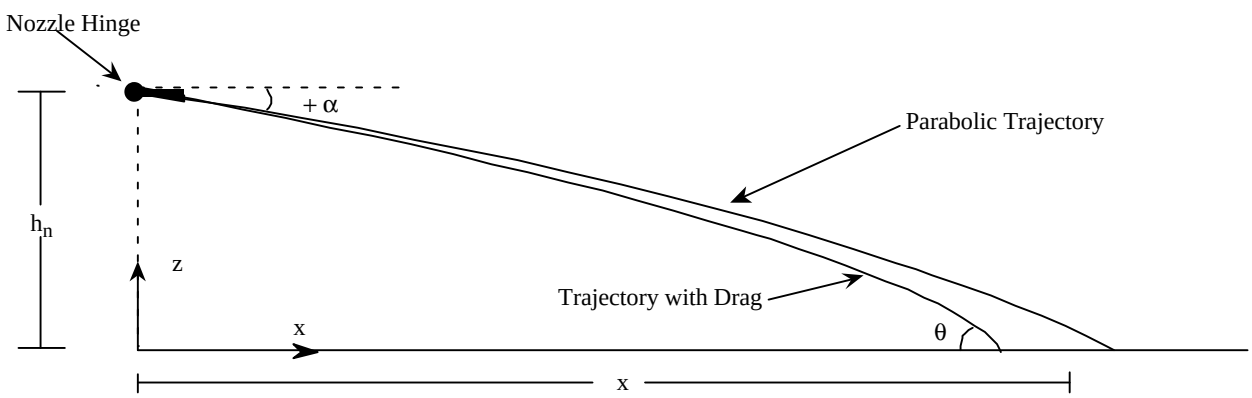

Figure 3.1. Water Jet Trajectory

and according to the definition for the drag coefficient, the drag force per unit length of the jet stream is proportional to the square of the local mean velocity. Based on the notation in Figure 3.2, we can write

$$F_D = -\frac{1}{2}\rho(C_D A)_x V_x^2 \hat{\mathbf{i}} + \frac{1}{2}\rho(C_D A)_y V_y^2 \hat{\mathbf{j}}$$

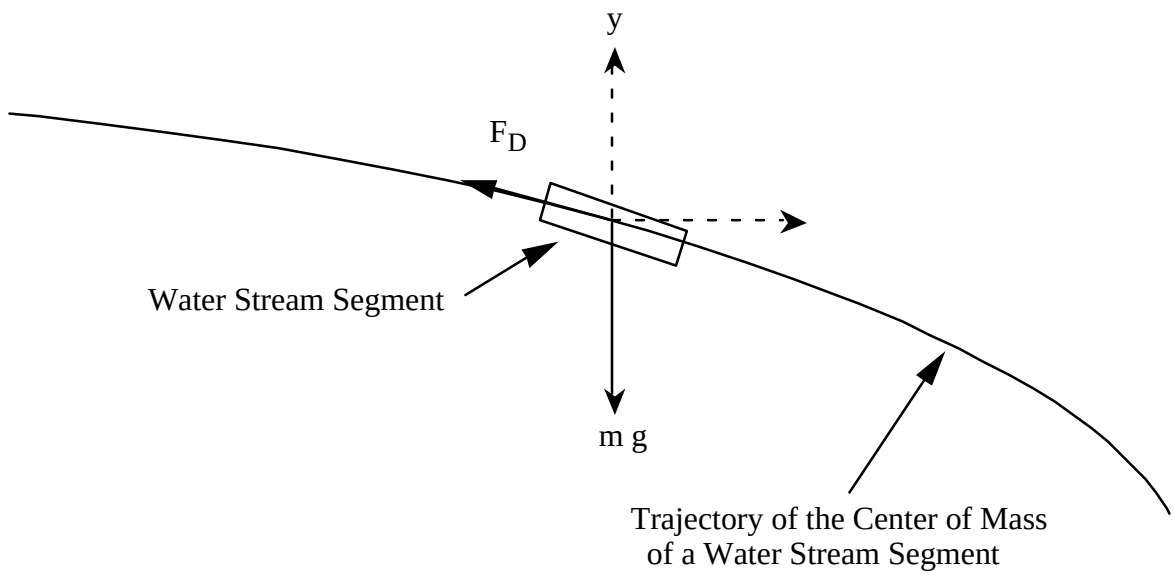

Figure 3.2. Force Balance on a Stream Segment

The equations for the jet stream trajectory are derived by performing a force balance on the center of mass of a moving jet stream segment of fixed identity (Lagrangian description) (Figure 3.2). Thus the equations of motion and initial conditions are

$$\frac{d^2x(t)}{dt^2} + \lambda\left[\frac{dx(t)}{dt}\right]^2 = 0 \tag{3.1a}$$

$$\frac{d^2z(t)}{dt^2} + g - \zeta\left[\frac{dz(t)}{dt}\right]^2 = 0 \tag{3.1b}$$

$$x(0) = 0, \quad \frac{dx(0)}{dt} = V_0 \cos\alpha \tag{3.1c, d}$$

$$z(0) = h_n, \quad \frac{dz(0)}{dt} = V_0 \sin\alpha \tag{3.1e, f}$$

where x and z are the horizontal and vertical spatial coordinates, respectively; t is time; g is the gravitational acceleration; V_o is the nozzle exit velocity; h_n is the vertical location of the nozzle hinge above the flat surface of the sludge waste; and λ and ζ are the drag factors on the jet stream along the x and z directions, given by

$$\lambda = \frac{1}{2}\rho(C_D A)_x / m$$

$$\zeta = \frac{1}{2}\rho(C_D A)_y / m$$

To transform the ideal trajectory to one that is closer to reality, the above model has included two adjustable parameters, namely, λ and ζ. In addition to the form and frictional aerodynamic drags, λ and ζ are also dependent on the coherence of the stream, which, in turn, depends on the internal nozzle design and discharge characteristics. In the present development the two adjustable parameters, λ and ζ, are assumed constant along the jet trajectory. In future developments, they must be considered dependent on the jet stream orientation. Both the form drag and the frictional drag are dependent on the inclination of the representative cylindrical fluid element. Thus λ and ζ must be determined experimentally. Notwithstanding the nonlinearity in Equations 3.1a to 3.1f, this system can be solved in closed form. Upon elimination of the time variable, the equation for the trajectory of the water stream is

$$z(x) = h_n - \frac{1}{\zeta}\ln\left\{\sqrt{1-\frac{\zeta V_o^2 \sin^2\alpha}{g}}\cosh\left[\operatorname{arctanh}\left(\frac{\zeta V_o \sin\alpha}{\sqrt{\zeta g}}\right)+\frac{\sqrt{\zeta g}\left(e^{\lambda x}-1\right)}{\lambda V_o \cos\alpha}\right]\right\} \qquad (3.2)$$

The horizontal location of the impingement point of the stream onto the floor, x_I, is obtained by solving for x at z = 0:

$$z(x_I) = 0$$

x_I can be written explicitly as follows:

$$x_I = \frac{1}{\lambda} \ln\left\{ \left[\operatorname{arccosh} \frac{e^{\zeta h_n}}{\sqrt{1 - \frac{\zeta V_o^2 \sin^2\alpha}{g}}} - \operatorname{arctanh}\left(\frac{\zeta V_o \sin\alpha}{\sqrt{\zeta g}} \right) \right] \frac{\lambda V_o \cos\alpha}{\sqrt{\zeta g}} + 1 \right\} \tag{3.3}$$

and the angle of impingement, θ, is calculated from

$$\theta = \arctan\left\{ \sqrt{\frac{g}{\zeta}} \frac{e^{\lambda x}}{V_o \cos\alpha} \tanh\left[\operatorname{arctanh}\left(\frac{\zeta V_o \sin\alpha}{\sqrt{\zeta g}} \right) + \frac{\sqrt{\zeta g}\left(e^{\lambda x} - 1\right)}{\lambda V_o \cos\alpha} \right]_{x = x_I} \right\} \tag{3.4}$$

Figure 3.3 shows stream trajectories for various values of λ and ζ. In the limit when λ and ζ go to zero, the trajectory becomes parabolic.

The force of the impact is dependent on the jet exit velocity, V_o, the nozzle pitch angle, α, and the jet stream's impact angle, θ. It is derived by applying the momentum equation to an appropriate control volume. The following assumptions are made:

a. Friction along the relatively small impact area on the flat surface is negligible.

b. The area through which the water flows out after impingement is larger than the stream cross-sectional area.

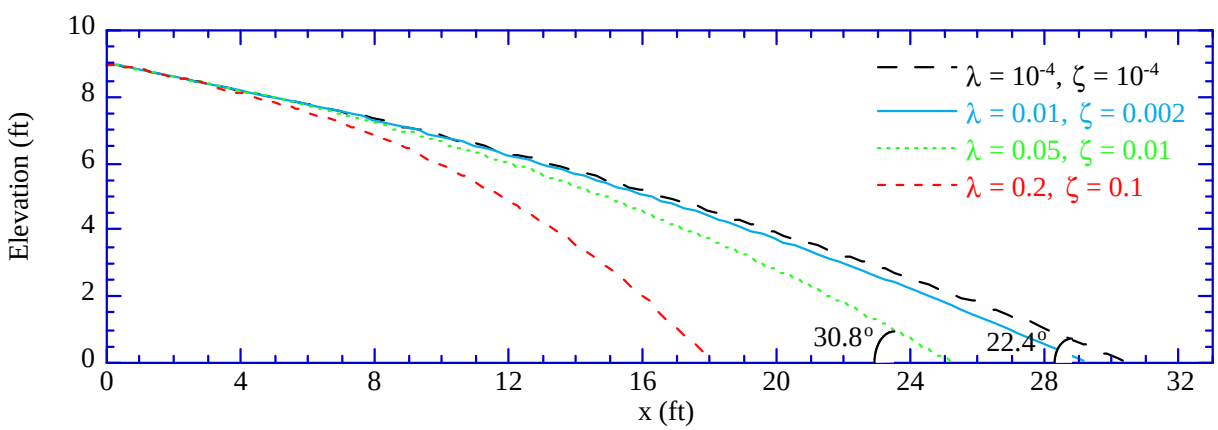

Figure 3.3. Effect of Drag Factors λ and ζ on Stream Trajectory (h_n = 9 ft, $\alpha = 10^o$, V_o = 65 ft/s)

c. The backflow of water along the flat surface after impingement is negligible, especially at smaller impingement angles and/or lower drag parameters.

d. The stream is mainly coherent upon impingement.

These assumptions are strong but will be considered tolerable in this initial analysis. In reality, coherence is lost because of instabilities that tend to break the stream up into numerous droplets (Hoyt and Taylor 1977). The upper bound of the force vector acting on the flat surface is

$$\vec{F}_{UB} = \rho A_o V_o^2 \left(\sin\theta\ \hat{i} - \cos\theta\ \hat{j}\right) \tag{3.5}$$

where, $\hat{i}$ and $\hat{j}$ are the unit vectors along the x and z directions, and θ is obtained from Equations 3.3 and 3.4. If λ and ζ are zero, Equation 3.5 can be easily written in terms of α:

$$\vec{F}_{UB}\Big|_{\delta=0} = \frac{\rho A_o V_o^2}{\sqrt{1+\frac{2gh_n}{V_o^2}}}\left(\cos\alpha\ \hat{i} - \sqrt{\sin^2\alpha + \frac{2gh_n}{V_o^2}}\ \hat{j}\right)$$

Applying Bernoulli's equation, an upper bound for the mean stagnation gauge pressure over the area of stream impingement becomes

$$\bar{p}_s = \frac{\rho}{2}\left(V_o^2 + 2gH\right)\int_0^R 2\pi f(r)\,dr$$

where f(r) represents the stagnation pressure distribution within the impingement cross-sectional area, and R is the average radius of the impingement area. For a 1-in.-diameter nozzle, using the parameter values h_n= 9 ft, $\alpha = 10^o$, V_o = 65 ft/sec, R = 0.5 in., ρ = 62.4 lb/ft^3, the maximum stagnation pressure is approximately 33 psig. However, if we assume that f(r) is a Gaussian or a quadratic function, the mean stagnation pressure would be lowered to between 7.5 and 16.5 psig.

For the sake of comparison, consider two stream trajectories (using the parameter values in Figure 3.3). For an ideal jet stream (with no drag) we obtain

x_I = 30.5 ft
θ = 22.4
F_x = 17.36 lb_f
F_y = 42.13 lb_f

which were calculated using Equations 3.2 to 3.5. For a jet stream with arbitrarily selected values of λ = 0.05 and ζ = 0.01 (Figure 3.3) we obtain

x_I = 25.3 ft
θ = 30.8

$F_x = 23.31\ lb_f$

$F_y = 39.14\ lb_f$

3.2 Conclusions and Planned Future Work

The first stage of the sluicing campaign for Tank C-106 stipulates the mobilization and retrieval of the top 2 ft of the 6-ft-deep sludge layer. It is not realistic, however, to expect that a uniform sludge layer can be removed from the waste cylinder, considering the geometry and locations of the sluicing jet and the retrieval pump. An inclined surface (a grade) directed toward the retrieval pump must be generated and maintained by the sluicing jet to let the gravitational forces move the mobilized slurry from near the sluicing nozzle to the vicinity of the slurry retrieval pump. Such a surface can be achieved in the present sluicing setup if the sluicing nozzle can be controlled and maneuvered in a prescribed fashion. Ideally, a flat grade that extends from the nozzle to the slurry pump can be achieved if the sluicing nozzle hinge can be lowered closer to the sludge surface. Unfortunately, this is not an option in the present sluicing plan. Agitation and currents induced by the pump suction will have some mobilizing effect, but they are more likely to influence sludge immediately below or near the pump intake. It is not possible for the pump suction to generate currents strong enough to induce the mobilized sludge near the sluicing nozzle side of the tank to move toward the slurry retrieval pump without the proposed gravity grade as part of a well-controlled sluicing strategy.

A feasible change that would enhance the sluicing process without altering the deployment configuration is to use a different sluicing nozzle that is capable of delivering a more coherent jet stream at longer distances.

The ability to predict, even approximately, the shape of a sluicing jet trajectory, the force, and the pressure fields generated at the impact target will be useful in the interpretation of data and the pursuit of practical sluicing procedures. Detailed experimental plans will be developed and experiments carried out at the University of Missouri at Rolla (UMR). The experimental program is designed to obtain data on the sluicing performance of the Hanford nozzle, the accuracy of predictions of the amounts of material removed, as derived in Section 2 of this report, and the rate of removal of the sluiced material for which a new model will be developed in FY 1998. The analyzed data and comparisons with new and existing models will appear in FY 1998 PNNL reports.

PNNL's Project RPD&E, Enhanced Sluicing task, sponsors a well-defined test program at UMR. During FY 1997, inadequate facilities and unexpected delays prevented the PNNL/UMR teams from completing the FY 1997 experimental program. During FY 1998, RPD&E will introduce many improvements to the experimental facilities at UMR. A new detailed experimental plan will be defined by PNNL, and tests will be carried out at UMR with PNNL involvement as necessary. The experimental program is planned to start in late winter and be completed in mid summer of 1998.

4.0 References

Hoyt JW and JJ Taylor. 1977. "Waves on Water Jets." *J. Fluid Mech*., 83:119-127.

Rouse H, JW Howe, and DE Metzler. 1952. "Experimental Investigation of Fire Monitors and Nozzles." *Trans. Amer. Soc. Civil Engrs*., 117:1147-1175.